CITY OF NEWPORT, RHODE ISLAND

DEPARTMENT OF UTILITIES - WATER POLLUTION CONTROL DIVISION

PROGRAM MANAGER FOR IMPLEMENTATION OF CSO LONG-TERM CONTROL PLAN

CONTRACT NO. 10-039

BELLEVUE AVENUE AND LEDGE ROAD CATCH BASIN DISCONNECTION

JULY 2026

LIST OF DRAWINGS

SHEET NUMBER	DRAWING NAME
GENERAL	
G-001	COVER AND INDEX TO DRAWINGS
G-002	GENERAL NOTES AND LEGEND
G-201	EROSION AND SEDIMENT CONTROL PLAN
G-501	EROSION AND SEDIMENT CONTROL DETAILS
SURVEY	
V-201	EXISTING CONDITIONS
CIVIL	
C-201	BELLEVUE AVENUE PLAN AND PROFILE
C-202	BELLEVUE AVENUE PLAN AND PROFILE
C-203	LEDGE ROAD PLAN AND SECTION VIEWS
C-204	INFILTRATION SYSTEMS PLANS
C-501	STANDARD DETAILS
C-502	STANDARD DETAILS
C-503	STANDARD DETAILS
C-504	STANDARD DETAILS
C-505	STANDARD DETAILS
C-506	STANDARD DETAILS
C-507	MANUFACTURER DETAILS
LANDSCAPE	
L-201	LANDSCAPE PLAN
L-202	LANDSCAPE DETAIL PLAN
L-203	ADD ALTERNATE 1
L-501	LANDSCAPE DETAILS

CONTACTS

OWNER:
CITY OF NEWPORT DEPARTMENT OF UTILITIES
70 HALSEY ST
NEWPORT, RI 02840
ROBERT SCHULTZ, DIRECTOR OF UTILITIES

DESIGNER:
JACOBS
120 ST. JAMES AVENUE, 5TH FLOOR
BOSTON, MA 02116

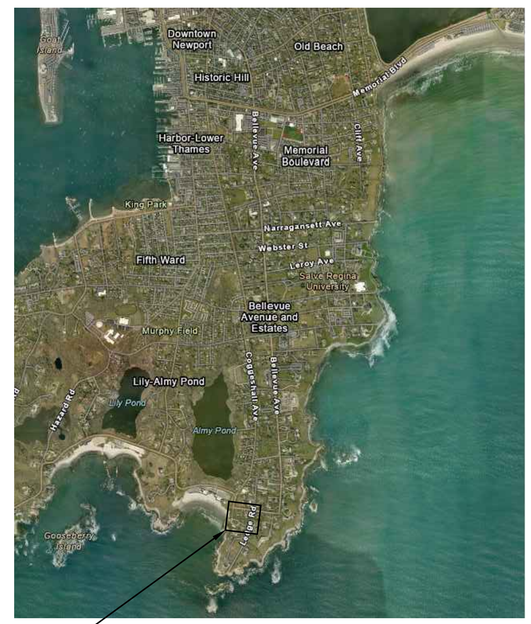

PROJECT LOCATION

N

LOCATION MAP
NTS

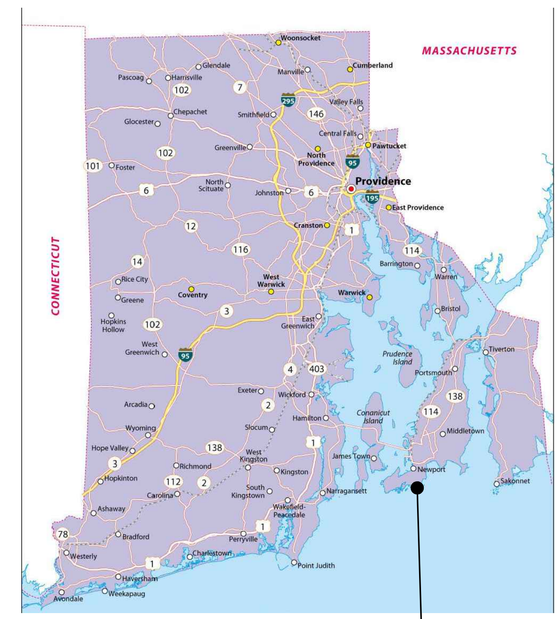

N

VICINITY MAP
NTS

PROJECT LOCATION
NEWPORT, RI

DRAFT
90% DESIGN DOCUMENTS

PREPARED BY
Jacobs

GENERAL SITE NOTES:

1. SOURCE OF TOPOGRAPHY SHOWN ON THE CIVIL PLANS ARE BASE MAPS PROVIDED BY GM2 ASSOCIATES, INC. DATED JANUARY 2024. ADDITIONAL MAPPING HAS BEEN ADDED FROM AS-BUILT DATA AND SUPPLEMENT SURVEY FROM THE CITY OF NEWPORT. EXISTING CONDITIONS MAY VARY FROM THOSE SHOWN ON THESE PLANS. THE CONTRACTOR SHALL VERIFY EXISTING CONDITIONS AND ADJUST WORK. PLAN ACCORDINGLY PRIOR TO BEGINNING CONSTRUCTION.
2. EXISTING TOPOGRAPHY, STRUCTURES, AND SITE FEATURES ARE SHOWN SCREENED AND/OR THIN-LINED. NEW FINISH GRADE, STRUCTURES, AND SITE FEATURES ARE SHOWN HEAVY-LINED.
3. HORIZONTAL DATUM: NAD83 RHODE ISLAND STATE PLANE, US FOOT.
4. VERTICAL DATUM: NAVD88, U.S. SURVEY FEET
5. MAINTAIN, RELOCATE, OR REPLACE EXISTING SURVEY MONUMENTS, CONTROL POINTS, AND STAKES WHICH ARE DISTURBED OR DESTROYED. PERFORM THE WORK TO PRODUCE THE SAME LEVEL OF ACCURACY AS THE ORIGINAL MONUMENT(S) IN A TIMELY MANNER, AND AT THE CONTRACTOR'S EXPENSE. CONTRACTOR SHALL NOT ALTER PROPERTY MARKERS.
6. CONTRACTOR SHALL BE RESPONSIBLE FOR OBTAINING A STAGING AREA FOR CONTRACTOR'S EMPLOYEE PARKING, CONTRACTOR'S TRAILERS AND ON-SITE STORAGE OF MATERIALS.
7. ELEVATIONS GIVEN ARE TO FINISH GRADE UNLESS OTHERWISE SHOWN.
8. SLOPE UNIFORMLY BETWEEN CONTOURS AND SPOT ELEVATIONS SHOWN.
9. UNLESS SHOWN OTHERWISE, ALL DISTURBED AREAS NOT RECEIVING A HARD SURFACE SHALL BE RESTORED WITH LOAM AND SEED.
10. CONTRACTOR SHALL BE RESPONSIBLE FOR IMPLEMENTING AND MAINTAINING EROSION CONTROL DEVICES DURING CONSTRUCTION. EROSION CONTROL DEVICES SHOWN ARE THE MINIMUM REQUIRED.
11. CONTRACTOR SHALL TAKE ALL OTHER MEASURES REQUIRED TO PREVENT SEDIMENT FROM LEAVING THE SITE. CONTRACTOR TO SUBMIT EROSION CONTROL PLAN PRIOR TO EXCAVATION.
12. DURING THE DAY, CONTRACTOR SHALL PROVIDE SIGNAGE/ CONES/ BARRELS IN ACCORDANCE WITH TRAFFIC CONTROL PLAN REVIEWED AND ACCEPTED BY THE ENGINEER AND OWNER. SEE SPECIFICATION SECTION 01 50 00, TEMPORARY CONTROLS, FOR ADDITIONAL REQUIREMENTS. CONTRACTOR SHALL SECURE ALL EXCAVATIONS AT THE END OF EACH DAY. AN HS-20 RATED METAL PLANE SUITABLE FOR USE AS A DRIVING SURFACE SHALL BE PLACED OVER ANY OPEN EXCAVATIONS OVERNIGHT.
13. CONTRACTOR SHALL PROVIDE TEMPORARY SUPPORT OF ALL POWER AND TELEPHONE POLES WITHIN 25-FEET OF PROPOSED EXCAVATIONS, OR MEET REQUIREMENTS OF THE UTILITY.
14. CONTRACTOR SHALL BE RESPONSIBLE FOR THE PROTECTION OF ALL EXISTING ELECTRIC DISTRIBUTION LINES CROSSED OR EXPOSED BY CONSTRUCTION OPERATIONS. CONTRACTOR SHALL SUBMIT SHOP DRAWINGS OF THE PROPOSED TEMPORARY SUPPORT SYSTEM TO BE USED FOR REVIEW BY THE ENGINEER, UTILITY OWNER, AND OWNER. ALL WORK MUST BE DONE UNDER THE SUPERVISION OF A NATIONAL GRID OBSERVER.
15. CONTRACTOR SHALL BE RESPONSIBLE FOR THE PROTECTION OF ALL EXISTING UTILITY DISTRIBUTION AND SERVICE LINES CROSSED OR EXPOSED BY CONSTRUCTION OPERATIONS WHERE EXISTING SERVICE LINES ARE CUT, BROKEN, OR DAMAGED, THE CONTRACTOR SHALL IMMEDIATELY INFORM AND COORDINATE WITH AFFECTED UTILITY OWNER. REPLACE THE SERVICE LINES WITH THE SAME TYPE OF ORIGINAL CONSTRUCTION OR BETTER. INTERRUPTIONS TO SERVICE IS NOT ALLOWED.
16. CONTRACTOR SHALL CLEAN THE RIGHT-OF-WAY WITHIN LIMITS OF WORK DAILY OF ANY AND ALL TRASH AND DEBRIS. CONTRACTOR SHALL PREVENT TRASH OR DEBRIS FROM ACCUMULATING OUTSIDE OF CONSTRUCTION ZONES, AND PROPERLY STORE OR DISPOSE OF THE MATERIAL.
17. CONTACT UTILITY COMPANY WHEN AN EXISTING UTILITY IS OBSERVED OR DAMAGED DURING CONSTRUCTION. CONTRACTOR SHALL MAKE REPAIRS IMMEDIATELY WITH LIKE OR BETTER MATERIALS IN ACCORDANCE WITH THE UTILITIES STANDARDS AND SPECIFICATIONS AND TO THEIR SATISFACTION.
18. IN ACCORDANCE WITH STATE LAW, AT LEAST 72-HOURS PRIOR TO BEGINNING EXCAVATION, CONTRACTOR SHALL NOTIFY THE RHODE ISLAND REGISTERED NOTIFICATION CENTER (RHODE ISLAND DIG SAFE SYSTEM - 811 or (888) 344-7233 IN ORDER TO HAVE UTILITIES LOCATED. WORK SHALL NOT COMMENCE UNTIL UTILITIES HAVE BEEN MARKED.
19. CONSTRUCTION SURVEYING AND STAKING IS THE SOLE RESPONSIBILITY OF THE CONTRACTOR. CONTRACTOR SHALL VERIFY ALL CONTROL DOCUMENTATION AND TIE-IN ELEVATIONS PRIOR TO BEGINNING CONSTRUCTION. CITY SHALL BE PROVIDED WITH COPIES OF ALL SURVEY NOTES, INCLUDING SETTING AND MAINTAINING TEMPORARY BENCH MARKS.
20. CONTRACTORS SHALL STAY WITHIN THE CITY OF NEWPORT RIGHTS-OF-WAY. ACCESS ROUTES OR OPERATIONS WHICH FALL OUTSIDE THE DESIGNATED AREAS WILL ONLY BE ALLOWED WITH PRIOR LANDOWNER CONSENT. CONTRACTOR SHALL PROVIDE THE CITY WITH A COPY OF ANY AGREEMENTS BETWEEN THE LANDOWNER AND THE CONTRACTOR PRIOR TO USE OF SUCH AREAS.
21. ALL SEWER CLEANING EQUIPMENT MUST BE LOCATED AND OPERATED WITHIN THE CITY OF NEWPORT EASEMENT OR RIGHT-OF-WAY AND TRAFFIC CONTROL MUST BE PROVIDED WHEN NECESSARY.
22. ANY CRUSHED STONE USE FOR BACKFILL SHALL BE COMPLETELY WRAPPED IN A SEPARATION GEOTEXTILE FABRIC SHALL BE USED WHEN CRUSHED STONE IS USED UNDER PAVED ROADWAY.

GENERAL YARD PIPING AND UTILITIES NOTES:

1. EXISTING UNDERGROUND UTILITIES OBTAINED FROM AS-BUILTS AND FROM FIELD SURVEY. CONTRACTOR SHALL FIELD VERIFY DEPTH AND LOCATION PRIOR TO EXCAVATION. CONTRACTOR SHALL PROTECT ALL EXISTING UTILITIES EVEN THOSE THAT ARE NOT SHOWN, RELOCATED, OR DEMOLISHED DURING CONSTRUCTION.
2. EXISTING PIPING AND EQUIPMENT ARE SHOWN SCREENED AND/OR THIN-LINED. NEW PIPING AND EQUIPMENT ARE SHOWN DARK AND/OR THICK-LINED.
3. ALL PIPES SHALL HAVE A CONSTANT SLOPE BETWEEN INVERT ELEVATIONS UNLESS A FITTING IS SHOWN.
4. FOR TRENCHING AND BACKFILL, SEE DETAIL 1 ON SHEET C-501
5. FOR SURFACE RESTORATION OF ASPHALT CONCRETE, SEE C-506 FIGURE 7.01 AND FOR GRASS, SEE SPECIFICATION 32 92 00.
6. MINIMUM ALLOWABLE CLEARANCE BETWEEN PIPES AT CROSSINGS SHALL BE 3". CONTROLLED DENSITY FILL SUPPORT IS REQUIRED AS SHOWN ON DETAIL 2 ON SHEET C-501.
7. TEST PITS TO LOCATE EXISTING UTILITIES MUST BE HAND DUG OR WITH A VACUUM TRUCK TO PROTECT UTILITIES.

LEGEND

EXISTING		PROPOSED
155	CONTOUR LINE	155
W	WATER LINE	W
S	SEWER LINE	S
G	GAS LINE	G
D	DRAINAGE LINE	D
E	ELECTRIC LINE	E
OHW	OVERHEAD WIRES	OHW
T	TELEPHONE	T
	ROAD / CURB LINE	
	SIGN	
	CATCH BASIN	OR
D	DRAINAGE MANHOLE	D
	GUY POLE	
E	ELECTRIC MANHOLE / HANDHOLE	E
UP	UTILITY / POWER POLE	UP
	LIGHTPOST	
S	SANITARY SEWER / SEPTIC MANHOLE	S
WG	WATER VALVE	WG
GG	GAS VALVE	GG
	HYDRANT	
	TEST PIT	TP-X
	TREE	
	BUILDING	
158.5	SPOT ELEVATION	158.5
	CURB	
	LIMIT OF DISTURBANCE	
	BORING LOCATION AND NUMBER	2023-B-X
	DEMOLITION	OR OR
	ASPHALT CONCRETE PAVEMENT	
	CONCRETE PAVEMENT	
	CRUSHED STONE SIDEWALK	
	LOAM AND SEED	

SECTION / DETAIL DESIGNATIONS

SECTION (LETTER) OR DETAIL (NUMERAL) DESIGNATION — A

DRAWING NUMBER (REPLACED WITH A LINE IF TAKEN AND SHOWN ON SAME SHEET)

ON DRAWING WHERE SECTION OR DETAIL IS TAKEN: 1 — 100-A-10010A1 — DRAWING NUMBER WHERE SHOWN

B — SECTION — SCALE — 100-S-3001

ON DRAWING WHERE SECTION IS SHOWN: DRAWING NUMBER(S) WHERE TAKEN

2 — DETAIL — SCALE — 200-M-10B10A

ON DRAWING WHERE DETAIL IS SHOWN: DRAWING NUMBER(S) WHERE TAKEN

DRAWING TITLE — SCALE

ON DRAWING WHERE ONLY A TITLE IS REQUIRED WITH NO REFERENCE (eg: ELEVATIONS)

B — SECTION CALLOUT WHERE SECTION IS ON THE SAME SHEET AND CUT EXTENDS TO A FIXED LIMIT

B 450-S-1002 — B 450-S-1002 — SECTION CALLOUT WHERE SECTION IS ON ANOTHER SHEET AND CUT EXTENDS THROUGHOUT ENTIRE SHEET

1 — GRID LINE INDICATOR

1 — KEYNOTE NUMBER

1 — REVISION / ADDENDA NUMBER

N — NORTH ARROW

ABBREVIATIONS

ADJ - ADJUST
CB - CATCH BASIN
CONC - CONCRETE
CS - CURB STOP
ERCP - ELIPTICAL REINFORCED CONCRETE PIPE
F & G - FRAME & GRATE
FH - FIRE HYDRANT
NTS - NOT TO SCALE
RET - RETAIN
R & R - REMOVE & RESET
SD - STORM DRAIN
SF - SILT FENCE
TYP - TYPICAL
WG - WATER GATE
WM - WATER METER

NO.	DATE	REVISION	BY	APVD

DSGN C.ONEILL | DR E.SHERIFI | CHK M.SCHMITZ | APVD

120 ST JAMES AVENUE
5TH FLOOR
BOSTON, MA 02116

CSO PROGRAM MANAGER
BELLEVUE AVENUE AND LEDGE ROAD
CATCH BASIN DISCONNECTION
CITY OF NEWPORT, RHODE ISLAND
DEPARTMENT OF UTILITIES

GENERAL
GENERAL NOTES AND LEGEND

AS NOTED
VERIFY SCALE
BAR IS ONE INCH ON ORIGINAL DRAWING.
0 1"

DATE	JULY 2026
PROJ	D3258803
DWG	G-002
SHEET	002 of 20

© JACOBS 2024. ALL RIGHTS RESERVED.
REUSE OF DOCUMENTS: THIS DOCUMENT, AND THE IDEAS AND DESIGNS INCORPORATED HEREIN, AS AN INSTRUMENT OF PROFESSIONAL SERVICE, IS THE PROPERTY OF JACOBS AND IS NOT TO BE USED, IN WHOLE OR IN PART, FOR ANY OTHER PROJECT WITHOUT THE WRITTEN AUTHORIZATION OF JACOBS.

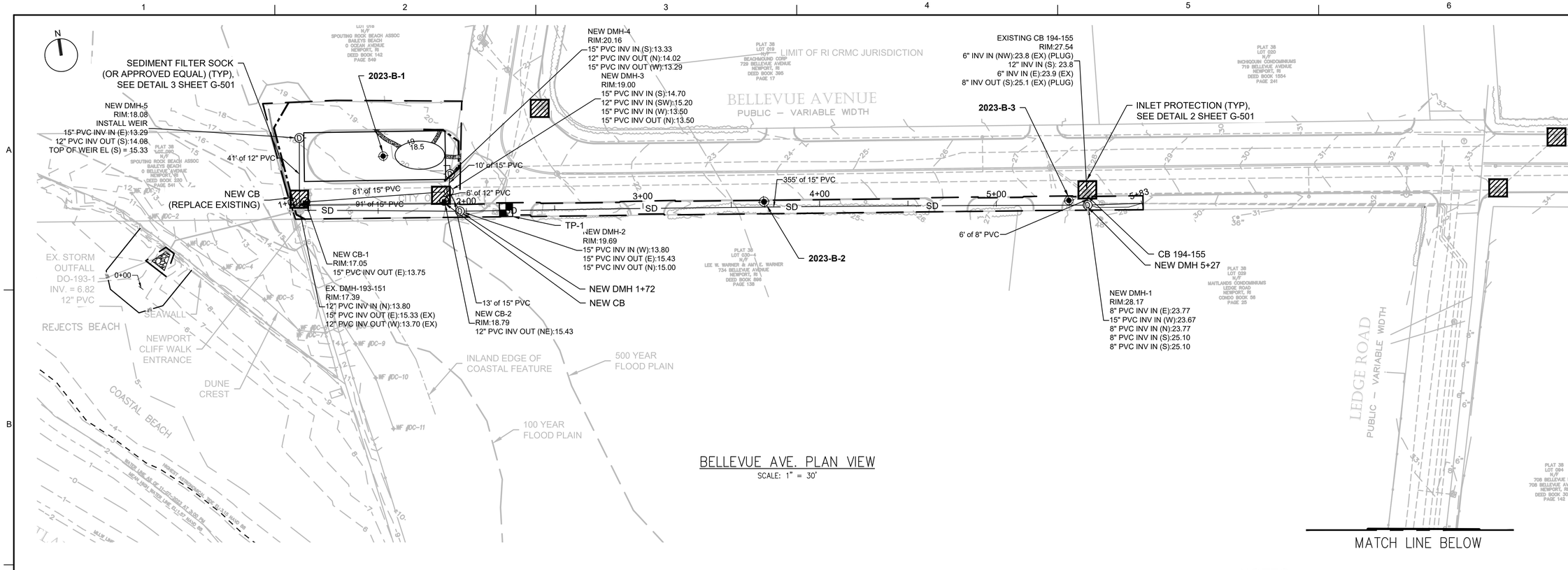

BELLEVUE AVE. PLAN VIEW

SCALE: 1" = 30'

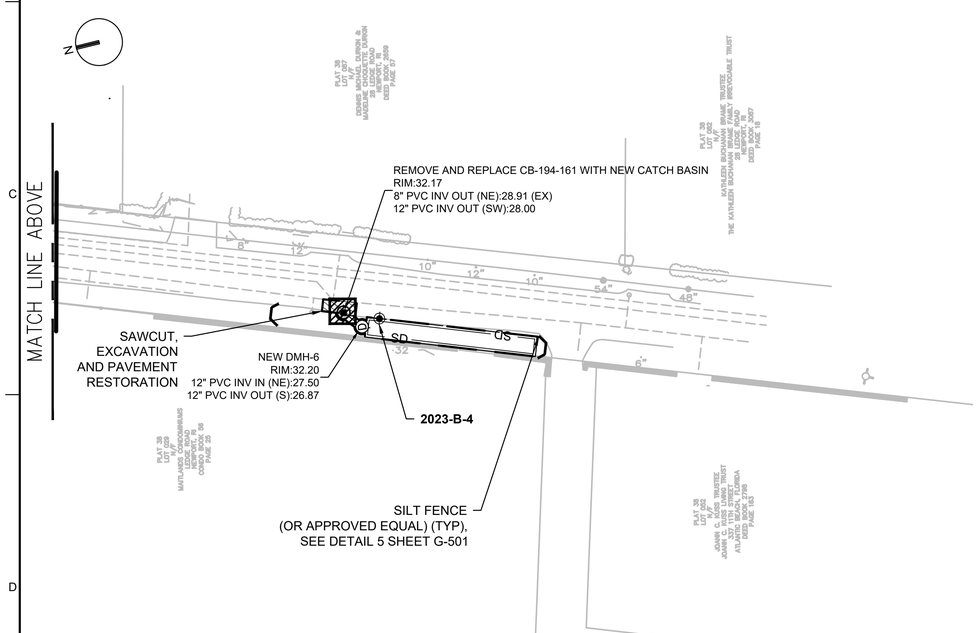

LEDGE ST. PLAN VIEW

SCALE: 1" = 30'

NOTES:

1. FOR SOIL EROSION AND SEDIMENT CONTROL NOTES REFER TO DRAWING SHEET G-501 .
2. REFER TO LANDSCAPING DRAWINGS FOR TREE PROTECTION REQUIREMENTS AND DETAILS.

LEGEND

- 100 YEAR / 500 YEAR FLOOD PLAIN LIMITS
- SEDIMENT FILTER SOCK
- INLET PROTECTION
- SILT FENCE

1"=30' 0 30 60

NO.	DATE	REVISION	BY	APVD

DSGN C.ONEILL | DR C.ONEILL | CHK M.SCHMITZ | APVD

120 ST JAMES AVENUE
5TH FLOOR
BOSTON, MA 02116

CSO PROGRAM MANAGER
BELLEVUE AVENUE AND LEDGE ROAD
CATCH BASIN DISCONNECTION
CITY OF NEWPORT, RHODE ISLAND
DEPARTMENT OF UTILITIES

Jacobs

GENERAL
EROSION AND SEDIMENT CONTROL PLAN

AS NOTED
VERIFY SCALE
BAR IS ONE INCH ON ORIGINAL DRAWING.
0 1"

DATE	JULY 2026
PROJ	D3258803
DWG	G-201
SHEET	003 of 20

© JACOBS 2024. ALL RIGHTS RESERVED.
REUSE OF DOCUMENTS: THIS DOCUMENT, AND THE IDEAS AND DESIGNS INCORPORATED HEREIN, AS AN INSTRUMENT OF PROFESSIONAL SERVICE, IS THE PROPERTY OF JACOBS AND IS NOT TO BE USED, IN WHOLE OR IN PART, FOR ANY OTHER PROJECT WITHOUT THE WRITTEN AUTHORIZATION OF JACOBS.

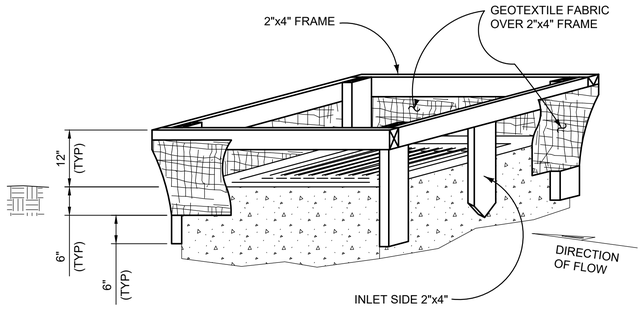

NOTES

1. FURNISH INLET PROTECTION CONSISTING OF 18" WIDE GEOTEXTILE FABRIC FENCE WITH A SECURELY NAILED 2"X4" WOOD FRAME WITH A VERTICALLY DRIVEN 2"X4" ON THE INLET, OR FLOW, SIDE OF THE STRUCTURE. USE GEOTEXTILE FABRIC CONFORMING TO RIDOT STANDARD SPECIFICATIONS SECTION M20 AND AASHTO M288 TABLE 5, CLASS 1 OR CLASS 2.
2. CONSTRUCT AN 18" WIDE GEOTEXTILE FABRIC FENCE SUPPORTED AROUND A STORM DRAIN INLET OR CATCH BASIN WITH A SECURELY NAILED 2"X4" WOOD FRAME. EXCAVATE A 6" TRENCH AROUND THE INLET, AND DRIVE SUPPORT POSTS 6" BELOW THE EXCAVATED TRENCH BOTTOM. STRETCH THE FABRIC AROUND THE FRAME. SECURE IT TIGHTLY, ENSURING THAT 6" OF FABRIC IS IN THE TRENCH. OVERLAP THE FABRIC ON ONE SIDE OF THE INLET SO THAT THE FABRIC ENDS ARE NOT ATTACHED TO THE SAME POST. BACKFILL AND COMPACT THE EXCAVATED SOIL TIGHTLY ONTO THE FABRIC. PLACE A VERTICAL 2"X4" IN THE CENTER OF THE INLET SO THAT THE TOP IS AT THE TOP OF THE FENCE AND THE BOTTOM IS AT LEAST 6" BELOW THE BOTTOM OF THE DITCH.
3. THE FILTER FABRIC SHALL BE MAINTAINED TO BE FUNCTIONAL. THIS SHALL INCLUDE REMOVAL OF TRAPPED SEDIMENT AND REQUIRE CLEANING, REPAIR, AND/OR REPLACEMENT OF FILTER FABRIC. SEDIMENT SHALL BE REMOVED WHEN ITS DEPTH REACHES HALF THE HEIGHT OF THE LOWEST SECTION OF FENCE.

1 YARD INLET PROTECTION

NTS

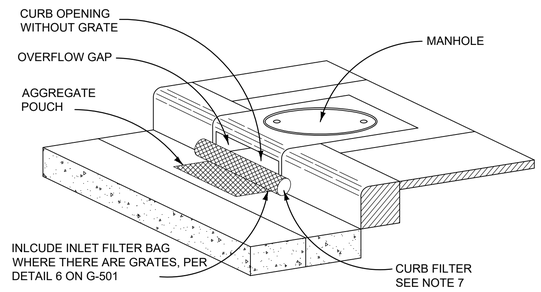

NOTES

1. THE CONTRACTOR SHALL PLACE INLET PROTECTION ON EACH INLET IN THE PROJECT AREA IN ACCORDANCE WITH THE SITE PLANS.
2. INLET CURB OPENING SHALL BE PROTECTED BY THE CURB FILTER, WHICH SHALL EXTEND 3" MIN ON EITHER SIDE OF THE CURB OPENING. AN OVERFLOW GAP SHALL BE PROVIDED TO ALLOW HIGHER FLOWS TO BYPASS THE SYSTEM DURING LARGER RAINFALL EVENTS AND INTENSITIES.
3. STRAW WATTLES SHOULD BE USED TO PROTECT INLET GRATES IN THE GRASSED AREA ABOVE THE CURB OPENING.
4. TO ENSURE THE PROPER OPERATION, REMOVE SILT, SEDIMENT AND DEBRIS FROM THE SURFACE AND THE VICINITY OF THE UNIT WITH A SQUARE POINT SHOVEL OR STIFF BRISTLE BROOM AWAY FROM ENVIRONMENTALLY SENSITIVE AREAS AND WATERWAYS IN MANNER SATISFACTORY TO THE ENGINEER.
5. REMOVE FINE MATERIAL FROM INSIDE INLET PROTECTION AS NEEDED.
6. DISPOSE OF INLET PROTECTION NO LONGER IN USE AT AN APPROPRIATE RECYCLING OR SOLID WASTE FACILITY.
7. PROVIDE IN ACCORDANCE WITH RHODE ISLAND SOIL EROSION AND SEDIMENT CONTROL HANDBOOK, SECTION 6.

2 CURB INLET PROTECTION

NTS

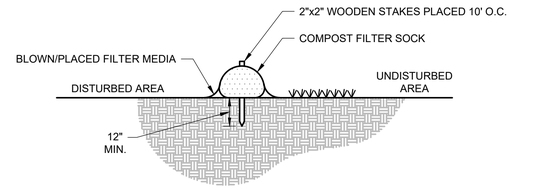

SECTION VIEW

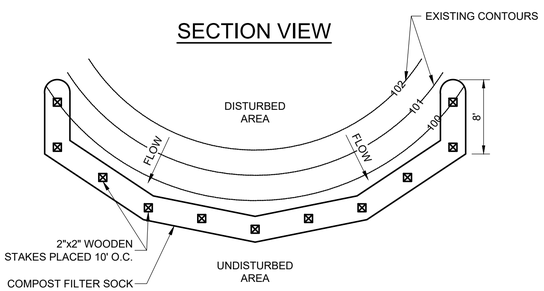

PLAN VIEW

3 SEDIMENT FILTER SOCK

NTS

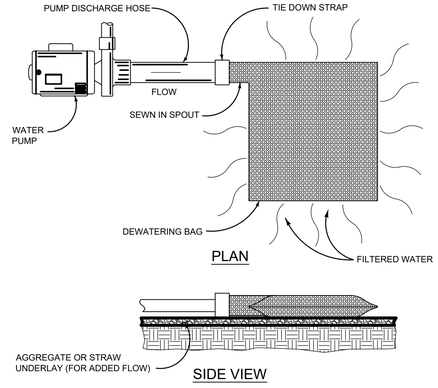

PLAN

SIDE VIEW

NOTES

1. FILTER BAG SHALL BE USED, AS NECESSARY, TO FILTER TURBID WATER DURING DEWATERING ACTIVITIES ONSITE.
2. FILTER BACK SHALL BE PLACED ON AN AGGREGATE OR STONE BED SUFFICIENT TO PREVENT EROSION FROM DISCHARGE WATER ON ADJACENT AREAS.
3. CONTRACTOR SHALL FOLLOW MANUFACTURER RECOMMENDATIONS FOR WATER PUMP, PUMP DISCHARGE HOSE AND FLOW RATE.
4. FILTER BAG SHALL BE REPLACED WHEN FLOW RATES REDUCE, THE FILTER BAG TEARS, OR IS OTHERWISE NO LONGER FUNCTIONING AT AN APPROPRIATE LEVEL FOR EFFICIENT DEWATERING.
5. IN NO CASE SHALL TURBID WATER FROM DEWATERING ACTIVITIES BE DISCHARGE DIRECTLY INTO INLETS OR RECEIVING WATERS.
6. FILTER BAG LOCATION AND SIZE TO BE DETERMINED BY CONTRACTOR ON SITE PRIOR TO CONSTRUCTION.
7. DEWATERING BAG SHALL BE NON WOVEN POLYPROPYLENE.
   - 7.1. BAG SHALL HAVE A MINIMUM FILTERING RATE OF 1500 GALLONS PER MINUTE.
   - 7.2. BAG SHALL HAVE A MINIMUM VOLUME OF 150 CUBIC FEET.
   - 7.3. BAG SHALL SPECIFICALLY FILTER SEDIMENT AND REMOVE OIL AND POLLUTANTS FROM THE DISCHARGE.
   - 7.4. BAG SHALL HAVE A MICRON RATING OF 180
   - 7.5. ACCOMMODATE A 4-INCH OR 6-INCH DISCHARGE HOSE
   - 7.6. BAG SHALL BE ULTRATECH DEWATERING BAG: 15' X 15', 1500 GPM FLOW RATE, 22.6 GAL OL CAPACITY, OR APPROVED EQUAL.

4 DEWATERING FILTER BAG

NTS

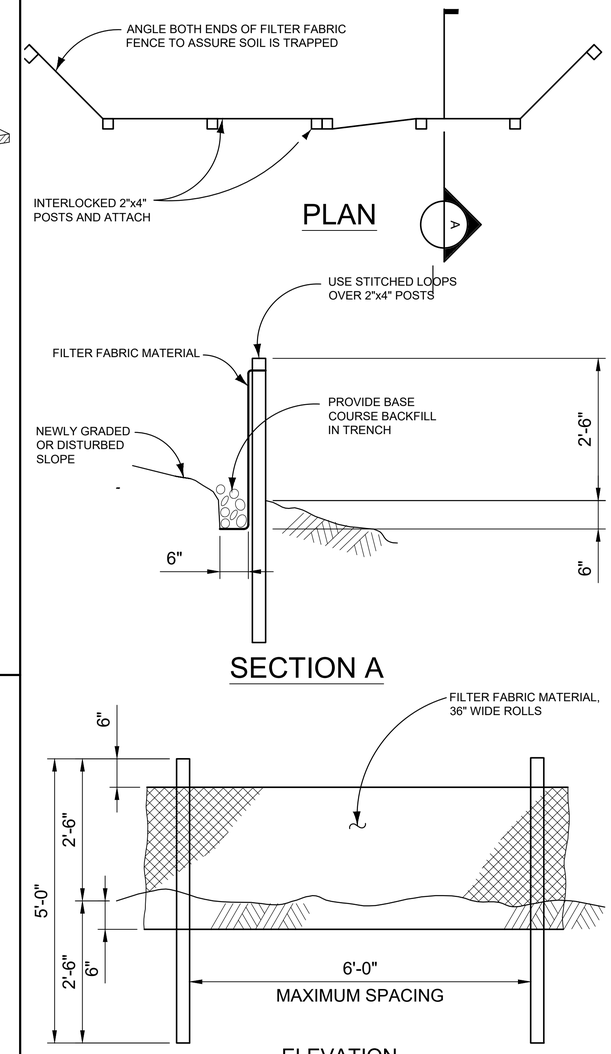

PLAN

SECTION A

ELEVATION

5 SILT FENCE

NTS

NOTES

1. BURY BOTTOM OF FILTER FABRIC 6" VERTICALLY BELOW FINISHED GRADE.
2. 2"X4" DOUGLAS FIR OR STEEL FENCE POSTS.
3. STITCHED LOOPS TO BE INSTALLED DOWNHILL SIDE OF SLOPE.
4. COMPACT ALL AREAS OF FILTER FABRIC TRENCH.
5. FILTER FABRIC SHALL BE WOVEN, POLYPROPYLENE, ULTRAVIOLET RESISTANT MATERIAL.
6. THE HEIGHT OF SILT FENCE SHALL NOT EXCEED 36" (HIGHER FENCES MAY IMPOUND VOLUMES OF WATER SUFFICIENT TO CAUSE FAILURE OF THE STRUCTURE).
7. FILTER FABRIC SHALL BE PURCHASED IN A CONTINUOUS ROLL CUT TO THE LENGTH OF THE BARRIER TO AVOID THE USE OF JOINTS. WHEN JOINTS ARE NECESSARY, FILTER CLOTH SHALL BE SPLICED TOGETHER ONLY AT A SUPPORT POST, WITH A MINIMUM OF A 6" OVERLAP, AND SECURELY SEALED.
8. PREFABRICATED COMMERCIAL SILT FENCE MAY BE SUBSTITUTED FOR BUILT-IN-FIELD FENCE.
9. FILTER FABRIC FENCE SHALL BE CONSTRUCTED BEFORE UPSLOPE LAND DISTURBANCE BEGINS AND SHALL BE PLACED AS CLOSE TO THE CONTOUR AS POSSIBLE SO THAT WATER WILL NOT CONCENTRATE AT LOW POINTS IN THE FENCE AND SO THAT SMALL SWALES OR DEPRESSIONS WHICH MAY CARRY SMALL CONCENTRATED FLOWS TO THE SILT FENCE ARE DISSIPATED ALONG ITS LENGTH.
10. SILT FENCES SHALL BE REMOVED WHEN THEY HAVE SERVED THEIR USEFUL PURPOSE, BUT NOT BEFORE THE UPSLOPE AREA HAS BEEN PERMANENTLY STABILIZED.

SOIL EROSION AND SEDIMENT CONTROL NOTES:

1. THE CONTRACTOR SHALL INSTALL TEMPORARY SEDIMENT CONTROL DEVICES AS REQUIRED IN ACCORDANCE WITH THE APPROVED FEDERAL, STATE, AND LOCAL PERMITS AND RHODE ISLAND SOIL EROSION AND SEDIMENT CONTROL HANDBOOK AND APPLICABLE EROSION AND SEDIMENT CONTROL PLAN, INCLUDING BUT NOT LIMITED TO FILTER FENCE, COMPOST FILTER SOCKS, AND INLET PROTECTION. THESE MEASURES WILL BE INSTALLED PRIOR TO ANY SOIL DISTURBANCE AND MAINTAINED UNTIL PROTECTION IS ESTABLISHED.
2. SOME EXCAVATED MATERIAL MAY BE REUSED ON SITE IN ACCORDANCE WITH SPECIFICATIONS. EXCESS MATERIAL SHALL BE HAULED AND DISPOSED OF OFF SITE ONCE APPROVED BY OWNER AND RELEVANT AGENCIES. NO MATERIAL IS PERMITTED TO BE STOCKPILED ON SITE OVERNIGHT, CONTRACTOR IS RESPONSIBLE FOR PROCURING AND MAINTAINING AN OFF-SITE LOCATION FOR STOCKPILING MATERIAL.
3. ALL STOCKPILES SHALL BE SURROUNDED WITH SILT FENCE. SEE DETAIL 5 ON SHEET G-501.
4. SOIL EROSION AND SEDIMENT CONTROL MEASURES SHALL BE USED FOR ALL CATCH BASINS, INLETS AND OTHER DRAINAGE STRUCTURES LOCATED WITHIN THE PROJECT WORK LIMITS. CONTROLS SHALL REMAIN IN PLACE UNTIL SURFACE RESTORATION IS COMPLETE. SEE DETAIL ON SHEET C-506 FOR PERMANENT PAVEMENT RESTORATION.
5. THE CONTRACTOR SHALL USE INLET SEDIMENT FILTER BAGS FOR INLETS, SEE DETAIL 6 ON SHEET G-501. THE INLET SEDIMENT FILTER BAG SHALL BE DESIGNED TO ALLOW THE PASSAGE OF WATER, WHILE PREVENTING SILT AND OTHER PARTICLES AND DEBRIS FROM PASSING INTO THE DRAINAGE STRUCTURE THROUGH THE STRUCTURE OPENING. THE SIZE OF THE FILTER BAG SHALL FIT THE DRAINAGE STRUCTURE GRATE AND BE MADE FROM A POLYPROPYLENE FABRIC THAT SUBSTANTIALLY CONFORMS TO THE FOLLOWING CHARACTERISTICS:

	UNIT	TEST
PERMEABILITY RATE	360gal/mm/yd^2	
GRAB TENSILE STRENGTH	300lbf	ASTM D-4632
APPARENT OPENING SIZE	0.017 in	ASTM D-4751
SEAMS	DOUBLE STITCHED	

   MAINTENANCE OF INLET SEDIMENT FILTER BAGS SHALL BE AS FOLLOWS: INLET SEDIMENT FILTER BAGS SHALL BE REPLACED WHEN $\frac{1}{3}$ FULL, OR WHEN INSPECTION REVEALS THE FABRIC HAS BEEN DAMAGED OR WEAKENED. FOR INLETS TO BE RETAINED THAT CAN'T BE ACCOMMODATED BY SEDIMENT FILTER BAGS, THE INLETS SHALL BE PROTECTED USING DETAILS 1, 2, AND 6 ON SHEET G-501.
6. PRIOR TO AND DURING THE COURSE OF CONSTRUCTION, THE CONTRACTOR SHALL COMPLY WITH ALL ADDITIONAL MEASURES DEEMED NECESSARY BY THE ENGINEER. THE CONTRACTOR SHALL BE RESPONSIBLE FOR MAINTAINING ALL EROSION AND SEDIMENT DEVICES THROUGHOUT THE CONTRACTOR DURATION.
7. ALL NECESSARY PRECAUTIONS SHALL BE TAKEN BY THE CONTRACTOR TO PREVENT SILT, SEDIMENT, FUELS, SOLVENTS, LUBRICANTS, EPOXY COATINGS, CONCRETE LEACHATE, CONCRETE WASHINGS FROM CONCRETE MIXERS, OR ANY OTHER POLLUTANT ASSOCIATED WITH CONSTRUCTION AND CONSTRUCTION PROCEDURES FROM ESCAPING INTO THE DRAINAGE SYSTEM OR LEAVING THE PROJECT AREA.
8. DEWATERING SHALL BE PERFORMED PER THE APPROVED PERMITS. ALL EXCAVATION WATER WHICH CONTAINS GROUNDWATER SHALL BE MANAGED AND TREATED PRIOR TO DISCHARGE PER THE SPECIFICATIONS, THE CONTRACTOR'S APPROVED DEWATERING PLAN, AND ALL PERMIT REQUIREMENTS FOR DEWATERING AND DISCHARGE.
9. ANY CONSTRUCTION STAGING, ACCESS, OR LAYDOWN AREAS OUTSIDE OF THE LIMITS OF THE PAVED SITE SHALL BE ENCLOSED WITH A PERIMETER OF SILT FENCE AS SHOWN IN DETAIL 5 ON SHEET G-501 AND OTHER MEASURES AS DIRECTED BY THE ENGINEER.
10. THE CONTRACTOR SHALL PROTECT ALL POINTS OF CONSTRUCTION INGRESS TO PREVENT THE DEPOSITION OF MATERIALS ONTO PUBLIC ROADS. ALL MATERIALS DEPOSITED ONTO PUBLIC ROADS SHALL BE REMOVED IMMEDIATELY.
11. THE CONTRACTOR SHALL USE SWEEPING AS THE PRIMARY METHOD OF DUST CONTROL. THE CONTRACTOR MAY ALSO USE WATER TRUCKS OR BARRIER TO CONTROL DUST FROM LEAVING THE PROJECT SITE. CALICUM CHLORIDE WILL NOT BE ALLOWED AS A MEANS OF DUST CONTROL.
12. ALL VEHICLE MAINTENANCE, FUELING, AND WASHING ARE TO BE PERFORMED OFF-SITE.

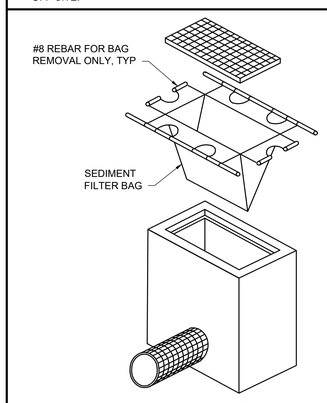

ISOMETRIC VIEW

NOTES:

1. SEE SEDIMENT AND EROSION CONTROL NOTES, ON THIS SHEET.
2. SEE NOTE 5 ON THIS SHEET FOR REQUIREMENTS

6 INLET SEDIMENT FILTER BAG

NTS

NO.	DATE	REVISION	BY	APVD

DSGN C.ONEILL | DR E.SHERIFI | CHK M.SCHMITZ | APVD

120 ST JAMES AVENUE
5TH FLOOR
BOSTON, MA 02116

CSO PROGRAM MANAGER
BELLEVUE AVENUE AND LEDGE ROAD
CATCH BASIN DISCONNECTION
CITY OF NEWPORT, RHODE ISLAND
DEPARTMENT OF UTILITIES

Jacobs

GENERAL
EROSION AND SEDIMENT CONTROL DETAILS

NTS
VERIFY SCALE
BAR IS ONE INCH ON ORIGINAL DRAWING.
0 1"

DATE	JULY 2026
PROJ	D3258803
DWG	G-501
SHEET	004 of 20

© JACOBS 2024. ALL RIGHTS RESERVED.
REUSE OF DOCUMENTS: THIS DOCUMENT, AND THE IDEAS AND DESIGNS INCORPORATED HEREIN, AS AN INSTRUMENT OF PROFESSIONAL SERVICE, IS THE PROPERTY OF JACOBS AND IS NOT TO BE USED, IN WHOLE OR IN PART, FOR ANY OTHER PROJECT WITHOUT THE WRITTEN AUTHORIZATION OF JACOBS.

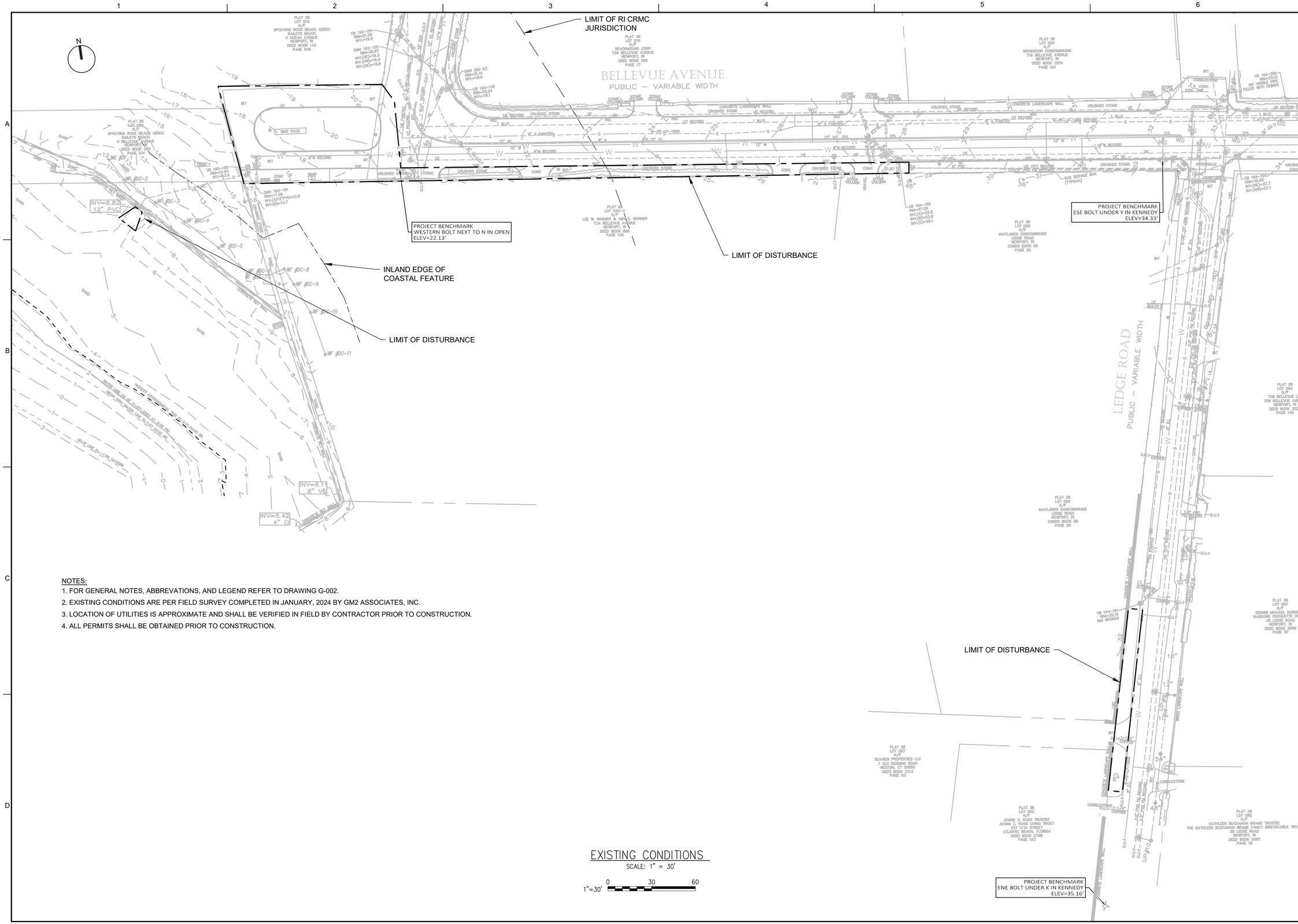

NOTES:

1. FOR GENERAL NOTES, ABBREVATIONS, AND LEGEND REFER TO DRAWING G-002.
2. EXISTING CONDITIONS ARE PER FIELD SURVEY COMPLETED IN JANUARY, 2024 BY GM2 ASSOCIATES, INC.
3. LOCATION OF UTILITIES IS APPROXIMATE AND SHALL BE VERIFIED IN FIELD BY CONTRACTOR PRIOR TO CONSTRUCTION.
4. ALL PERMITS SHALL BE OBTAINED PRIOR TO CONSTRUCTION.

EXISTING CONDITIONS

SCALE: 1" = 30'

1"=30' 0 30 60

NO.	DATE	REVISION	BY	APVD

DSGN C.ONEILL | DR E.SHERIFI | CHK M.SCHMITZ | APVD

120 ST JAMES AVENUE
5TH FLOOR
BOSTON, MA 02116

CSO PROGRAM MANAGER
BELLEVUE AVENUE AND LEDGE ROAD
CATCH BASIN DISCONNECTION
CITY OF NEWPORT, RHODE ISLAND
DEPARTMENT OF UTILITIES

Jacobs

CIVIL
EXISTING CONDITIONS

1" = 30'
VERIFY SCALE
BAR IS ONE INCH ON ORIGINAL DRAWING.
0 1"

DATE	JULY 2026
PROJ	D3258803
DWG	V-201
SHEET	005 of 20

REUSE OF DOCUMENTS: THIS DOCUMENT, AND THE IDEAS AND DESIGNS INCORPORATED HEREIN, AS AN INSTRUMENT OF PROFESSIONAL SERVICE, IS THE PROPERTY OF JACOBS AND IS NOT TO BE USED, IN WHOLE OR IN PART, FOR ANY OTHER PROJECT WITHOUT THE WRITTEN AUTHORIZATION OF JACOBS.

© JACOBS 2024. ALL RIGHTS RESERVED.

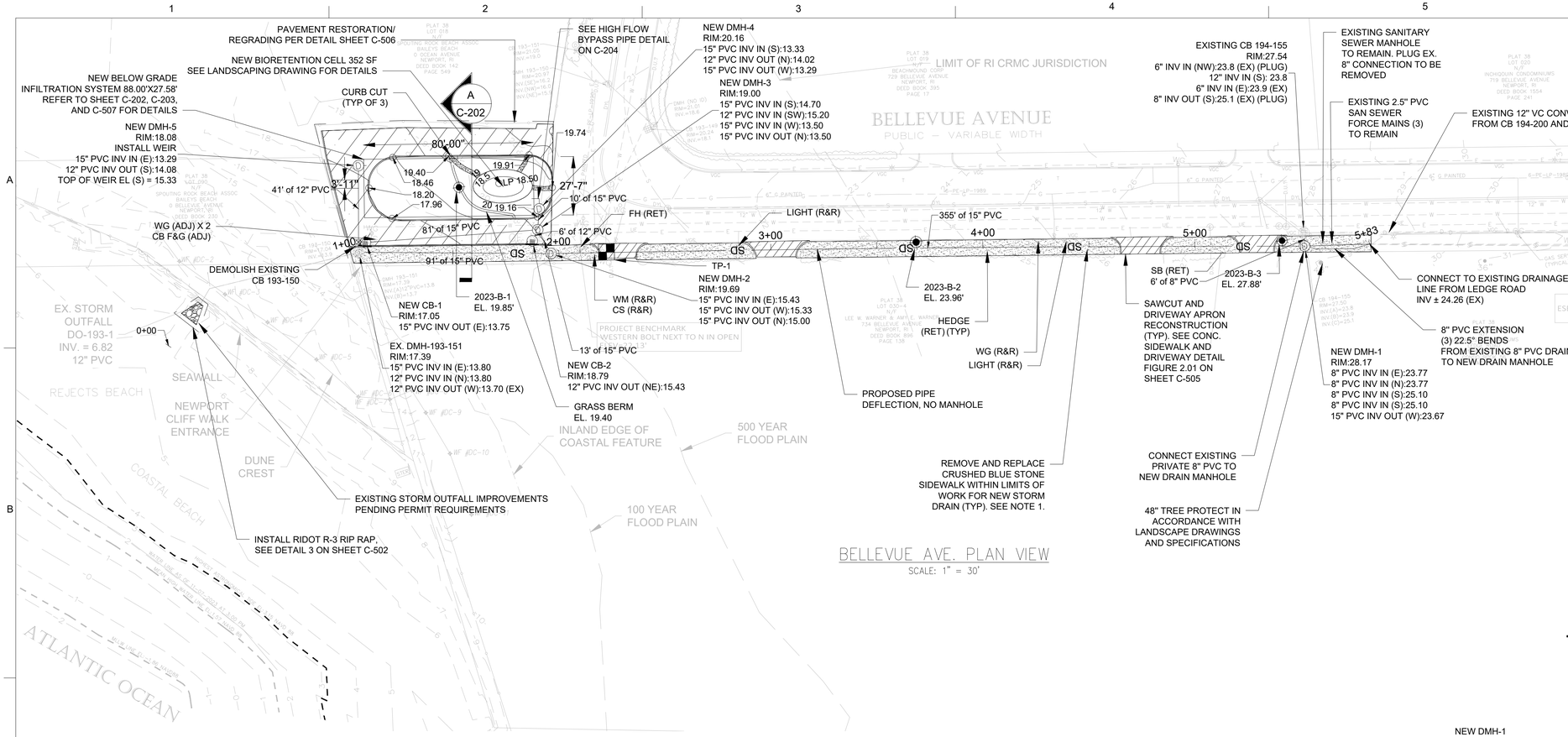

BELLEVUE AVE. PLAN VIEW

SCALE: 1" = 30'

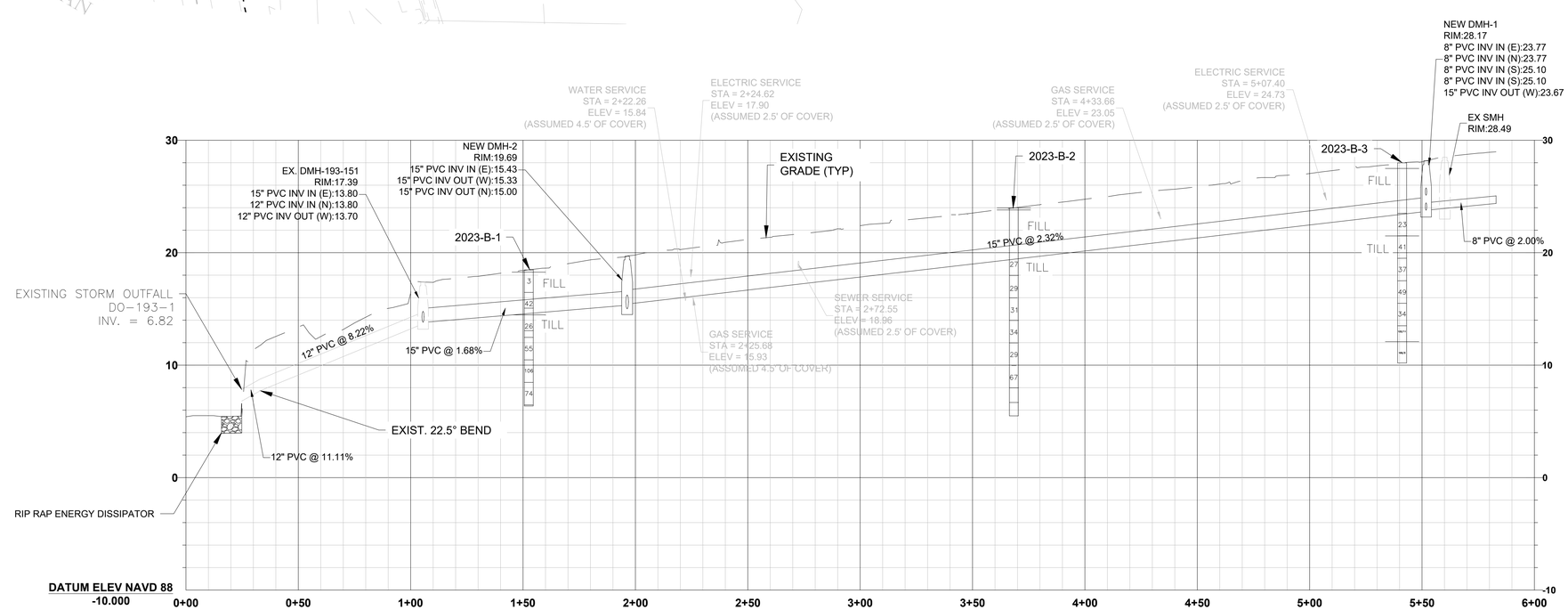

BELLEVUE AVE. PROFILE VIEW

SCALE: H: 1" = 30', V: 1" = 6'

NOTES:

1. CRUSHED BLUESTONE SIDEWALK WITHIN LIMITS OF WORK FOR NEW STORM DRAIN SHALL BE REPLACED TO MATCH EXISTING IN ACCORDANCE WITH CITY OF NEWPORT CRUSHED STONE SIDEWALK STANDARD DETAIL, PROVIDED ON SHEET C-501, AND IN ACCORDANCE WITH THE CITY OF NEWPORT CRUSHED STONE SIDEWALK SPECIFICATION 905.9902 AND 905.9903.
2. LOCATIONS AND ELEVATIONS OF EXISTING UTILITIES AND SERVICES SHOWN ON PLAN AND PROFILE ARE APPROXIMATE. LOCATION AND ELEVATION OF UTILITIES SHALL BE VERIFIED IN FIELD BY CONTRACTOR PRIOR TO CONSTRUCTION.
3. ALL MANHOLES SHALL BE 48" DIAMETER (INTERNAL) UNLESS OTHERWISE NOTED.
4. ALL CATCH BASINS SHALL BE 48" DIAMETER (INTERNAL), ROUND SHAPE UNLESS OTHERWISE NOTED.

1"=30' 0 30 60 FT. HORIZ
0 6 12 FT. VERT

NO.	DATE	REVISION	BY	APVD

DSGN	DR	CHK	APVD
R.GRAHAM	C.MAGUIRE	M.SCHMITZ	

120 ST JAMES AVENUE
5TH FLOOR
BOSTON, MA 02116

CSO PROGRAM MANAGER
BELLEVUE AVENUE AND LEDGE ROAD
CATCH BASIN DISCONNECTION
CITY OF NEWPORT, RHODE ISLAND
DEPARTMENT OF UTILITIES

Jacobs

CIVIL
BELLEVUE AVENUE
PLAN AND PROFILE

AS NOTED
VERIFY SCALE
BAR IS ONE INCH ON ORIGINAL DRAWING.
0 1"

DATE	JULY 2026
PROJ	D3258803
DWG	C-201
SHEET	006 of 20

REUSE OF DOCUMENTS: THIS DOCUMENT, AND THE IDEAS AND DESIGNS INCORPORATED HEREIN, AS AN INSTRUMENT OF PROFESSIONAL SERVICE, IS THE PROPERTY OF JACOBS AND IS NOT TO BE USED, IN WHOLE OR IN PART, FOR ANY OTHER PROJECT WITHOUT THE WRITTEN AUTHORIZATION OF JACOBS.

© JACOBS 2024. ALL RIGHTS RESERVED.

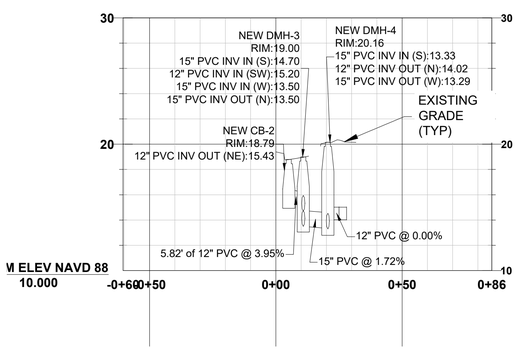

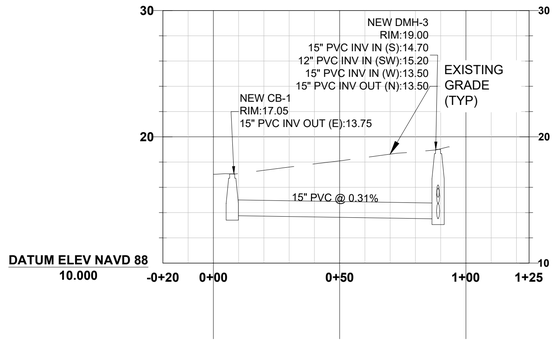

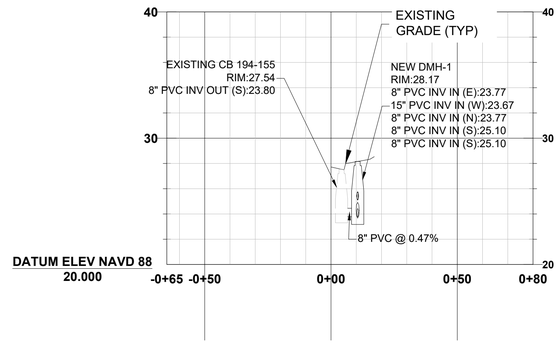

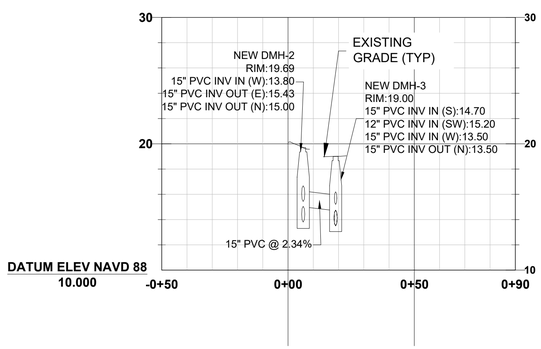

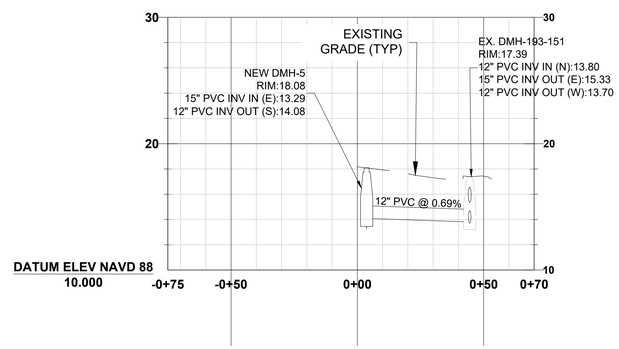

LATERAL PROFILE VIEWS

SCALE: H: 1" = 30', V: 1" = 6'

1"=30' 0 30 60 FT. HORIZ
0 6 12 FT. VERT

NO.	DATE	REVISION	BY	APVD

DSGN	DR	CHK	APVD
R.GRAHAM	C.MAGUIRE	M.SCHMITZ	

120 ST JAMES AVENUE
5TH FLOOR
BOSTON, MA 02116

CSO PROGRAM MANAGER
BELLEVUE AVENUE AND LEDGE ROAD
CATCH BASIN DISCONNECTION
CITY OF NEWPORT, RHODE ISLAND
DEPARTMENT OF UTILITIES

CIVIL
BELLEVUE AVENUE
PLAN AND PROFILE

AS NOTED
VERIFY SCALE
BAR IS ONE INCH ON ORIGINAL DRAWING.
0 1"

DATE	JULY 2026
PROJ	D3258803
DWG	C-202
SHEET	007 of 20

REUSE OF DOCUMENTS: THIS DOCUMENT, AND THE IDEAS AND DESIGNS INCORPORATED HEREIN, AS AN INSTRUMENT OF PROFESSIONAL SERVICE, IS THE PROPERTY OF JACOBS AND IS NOT TO BE USED, IN WHOLE OR IN PART, FOR ANY OTHER PROJECT WITHOUT THE WRITTEN AUTHORIZATION OF JACOBS.

© JACOBS 2024. ALL RIGHTS RESERVED.

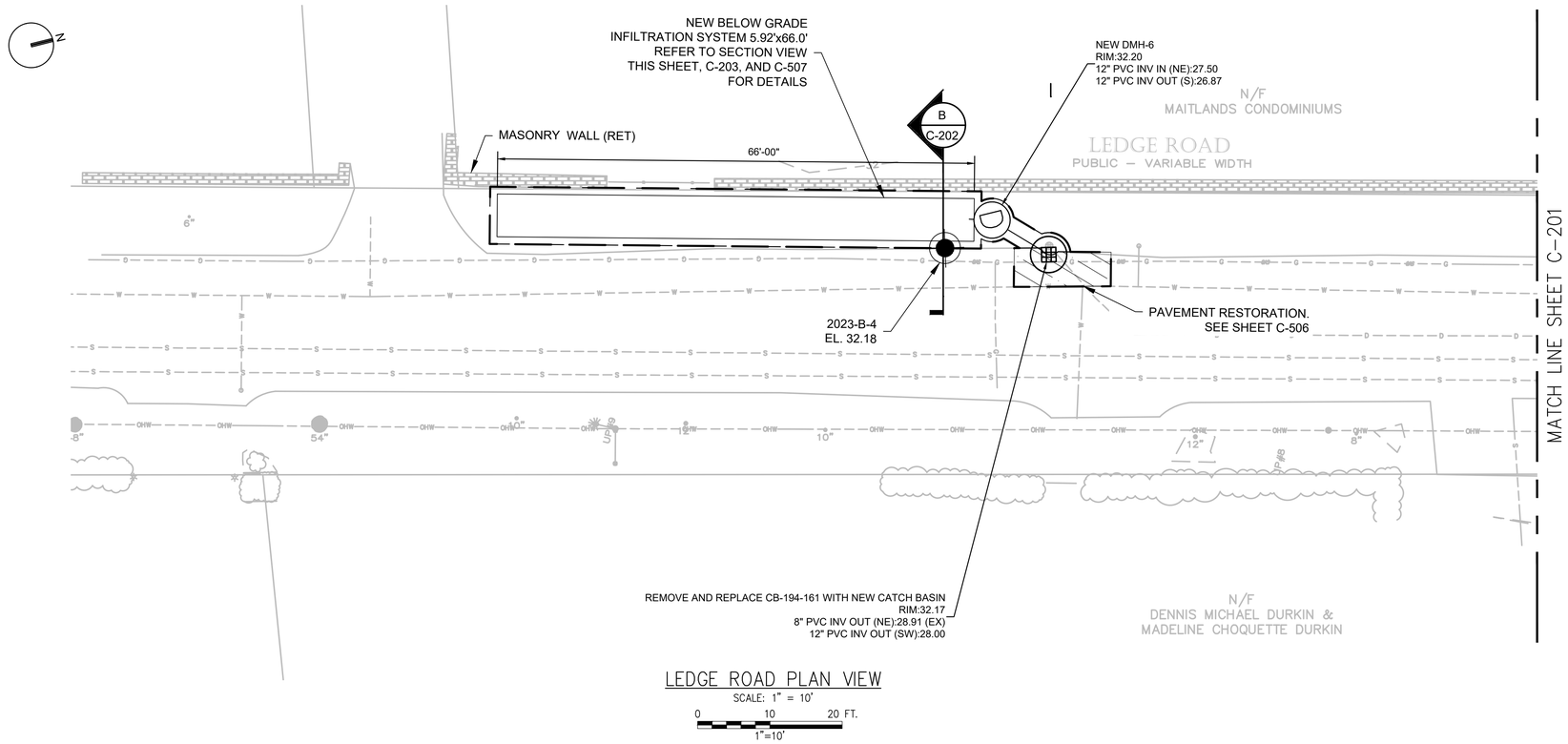

LEDGE ROAD PLAN VIEW

SCALE: 1" = 10'

0 10 20 FT.

1"=10'

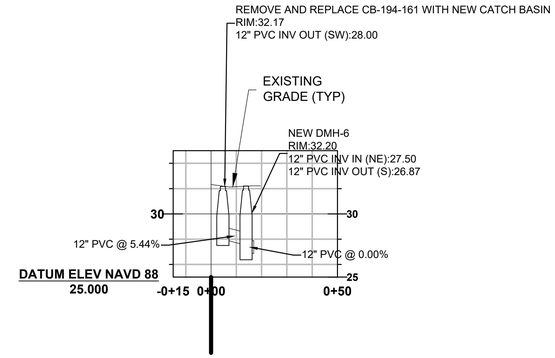

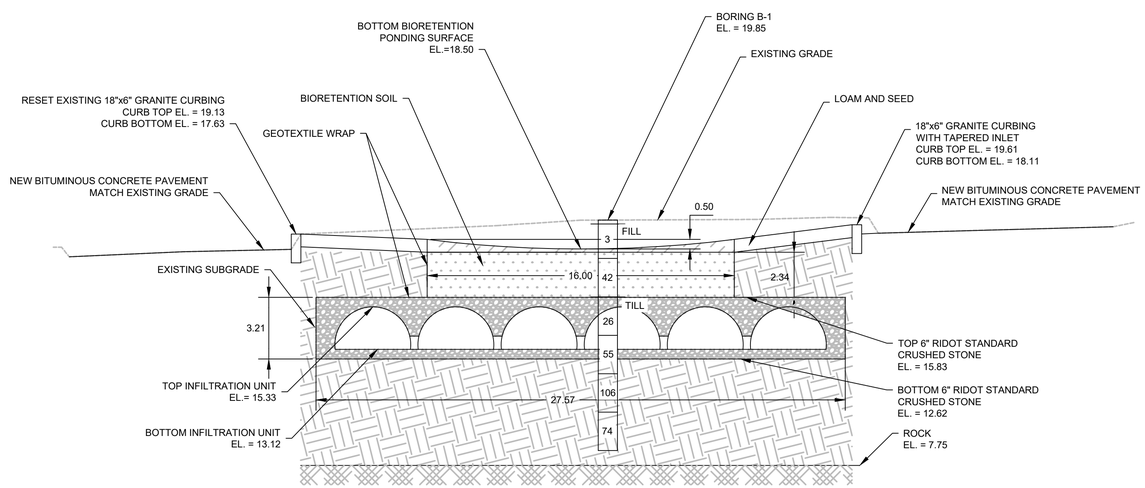

A C-201

BELLEVUE AVE. INFILTRATION SYSTEM - SECTION VIEW

NTS

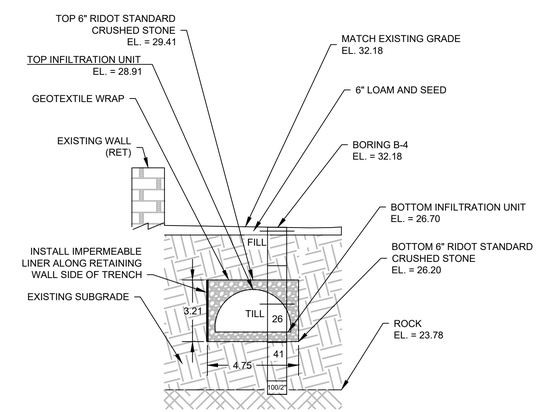

B C-202

LEDGE RD. INFILTRATION SYSTEM - SECTION VIEW

NTS

NOTES:

1. INFILTRATION SYSTEM SHALL BE RATED FOR AASHTO H-2O LOADING WITH 30"+ OF COVER.
2. USE PROPER EXCAVATION SUPPORT TO PREVENT UNDERMINING EXISTING WALL

NO.	DATE	REVISION	BY	APVD

DSGN C.ONEILL | DR C.MAGUIRE | CHK M.SCHMITZ | APVD

120 ST JAMES AVENUE
5TH FLOOR
BOSTON, MA 02116

CSO PROGRAM MANAGER
BELLEVUE AVENUE AND LEDGE ROAD
CATCH BASIN DISCONNECTION
CITY OF NEWPORT, RHODE ISLAND
DEPARTMENT OF UTILITIES

Jacobs

CIVIL
LEDGE ROAD
PLAN AND SECTION VIEWS

AS NOTED
VERIFY SCALE
BAR IS ONE INCH ON ORIGINAL DRAWING.
0 1"

DATE	JULY 2026
PROJ	D3258803
DWG	C-203
SHEET	008 of 20

REUSE OF DOCUMENTS: THIS DOCUMENT, AND THE IDEAS AND DESIGNS INCORPORATED HEREIN, AS AN INSTRUMENT OF PROFESSIONAL SERVICE, IS THE PROPERTY OF JACOBS AND IS NOT TO BE USED, IN WHOLE OR IN PART, FOR ANY OTHER PROJECT WITHOUT THE WRITTEN AUTHORIZATION OF JACOBS.

© JACOBS 2024. ALL RIGHTS RESERVED.

CONCEPTUAL STORMWATER MANAGEMENT SYSTEM ELEVATIONS (FT)	
MAXIMUM ALLOWABLE GRADE (TOP OF PAVEMENT OR UNPAVED)	27.33
MINIMUM ALLOWABLE GRADE (UNPAVED TRAFFIC)	16.66
MINIMUM ALLOWABLE GRADE (TOP OF RIGID PAVEMENT)	16.06
MINIMUM ALLOWABLE GRADE (BASE OF FLEXIBLE PAVEMENT)	16.50
TOP OF STONE ELEVATION	15.83
TOP OF CHAMBER ELEVATION	15.33
12" x 12" TOP MANIFOLD INVERT	14.02
15" BOTTOM CONNECTION INVERT	13.29
15" BOTTOM CONNECTION INVERT	13.29
BOTTOM OF CHAMBER ELEVATION	13.12
BOTTOM OF STONE ELEVATION	12.62

CULTEC STORMWATER MANAGEMENT SYSTEM SUMMARY	
TOTAL STORAGE REQUIRED (CU. FEET)	4531
TOTAL STORAGE PROVIDED (CU. FEET)	4539
% STONE POROSITY	40
SYSTEM AREA (SQ. FEET)	2207
DEPTH OF EMBEDMENT STONE (IN)	6
DEPTH OF BEDDING STONE (IN)	6
SYSTEM PERIMETER (FT)	215.2
SPACING BETWEEN CHAMBER ROWS (IN)	5.0

PART TYPE	ITEM ON LAYOUT	DESCRIPTION	INVERT IN	INVERT OUT
ELEVATED BYPASS PIPE	A	12" HIGH-FLOW BYPASS PIPE (PROVIDED BY OTHERS)	13.37"	13.37"
CONCRETE STRUCTURE	B	INLET STRUCTURE (PROVIDED BY OTHERS)	13.33"	13.29"
CONCRETE STRUCTURE	C	OUTLET WEIR STRUCTURE (PROVIDED BY OTHERS)	13.29"	14.08"
INLET PIPE	D	15" INLET/SEPARATOR ROW ACCESS PIPE (PROVIDED BYCONTRACTOR)	13.29"	13.29"
OUTLET PIPE	E	15" OUTLET PIPE (PROVIDED BY OTHERS)	13.29"	13.29"
INSPECTION PORT	G	6"-10" UNIVERSAL (SEE DETAIL)	-	-

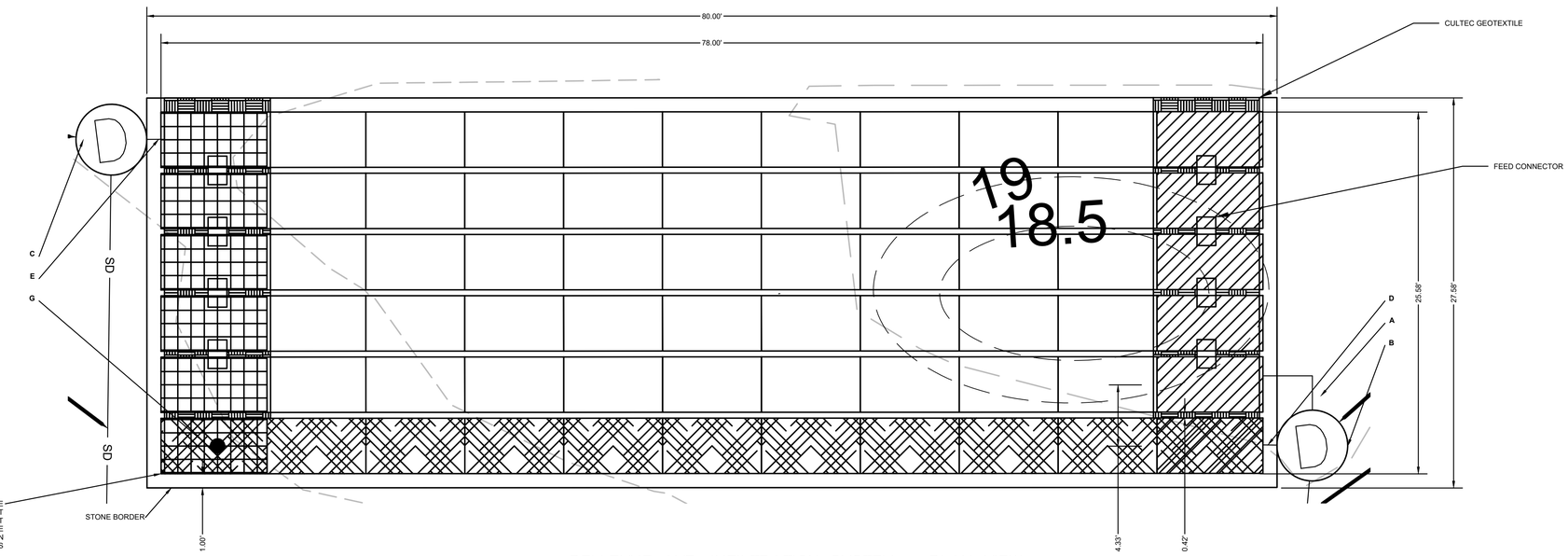

BELLEVUE AVE. INFILTRATION SYSTEM – PLAN VIEW

SCALE: N.T.S.

CONCEPTUAL STORMWATER MANAGEMENT SYSTEM ELEVATIONS (FT)	
MAXIMUM ALLOWABLE GRADE (TOP OF PAVEMENT OR UNPAVED)	40.91
MINIMUM ALLOWABLE GRADE (UNPAVED TRAFFIC)	30.24
MINIMUM ALLOWABLE GRADE (TOP OF RIGID PAVEMENT)	30.08
MINIMUM ALLOWABLE GRADE (BASE OF FLEXIBLE PAVEMENT)	30.08
TOP OF STONE ELEVATION	29.41
TOP OF CHAMBER ELEVATION	28.91
18" BOTTOM CONNECTION INVERT	26.87
BOTTOM OF CHAMBER ELEVATION	26.70
BOTTOM OF STONE ELEVATION	26.20

CULTEC STORMWATER MANAGEMENT SYSTEM SUMMARY	
TOTAL STORAGE REQUIRED (CU. FEET)	699
TOTAL STORAGE PROVIDED (CU. FEET)	735
% STONE POROSITY	40
SYSTEM AREA (SQ. FEET)	391
DEPTH OF EMBEDMENT STONE (IN)	6
DEPTH OF BEDDING STONE (IN)	6
SYSTEM PERIMETER (FT)	143.8
SPACING BETWEEN CHAMBER ROWS (IN)	5.0

PART TYPE	ITEM ON LAYOUT	DESCRIPTION	INVERT IN	INVERT OUT
CONCRETE STRUCTURE	A	INLET STRUCTURE (DESIGN BY ENGINEER / PROVIDED BY OTHERS)	27.50"	26.87"
INLET PIPE	B	18" INLET/SEPARATOR ROW ACCESS PIPE (PROVIDED BY OTHERS)	26.87"	26.87"
INSPECTION PORT	D	6"-10" UNIVERSAL (SEE DETAIL)	-	-

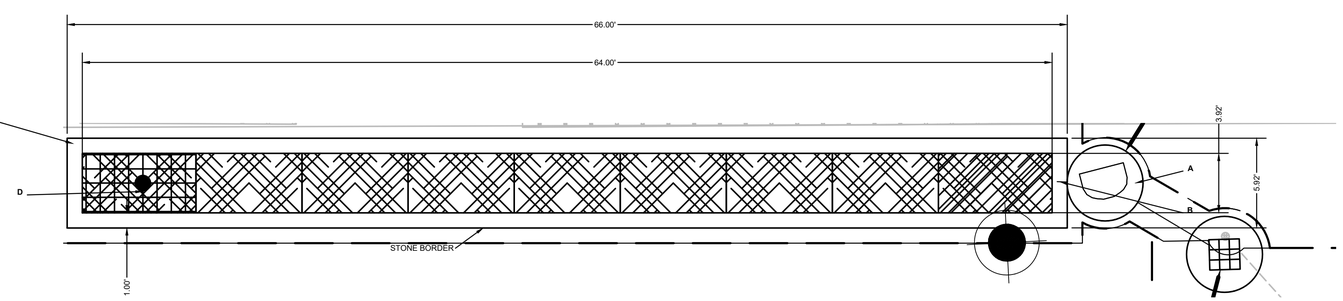

LEDGE RD. INFILTRATION SYSTEM – PLAN VIEW

SCALE: N.T.S.

CULTEC RECHARGER® 280HD LEGEND

- CULTEC RECHARGER 280SHD STARTER
- CULTEC RECHARGER 280IHD INTERMEDIATE
- CULTEC RECHARGER 280EHD END
- CULTEC SEPARATOR ROW
- CULTEC WOVEN GEOTEXTILE

DETAILS PROVIDED ON THIS SHEET ARE AN EXAMPLE PROVIDED FOR ILLUSTRATIVE PURPOSES. PRODUCT SPECIFIC INSTALLATION DETAILS SHALL BE PROVIDED BY THE CONTRACTOR AS SHOP DRAWING. SEE SPECIFICATIONS FOR MORE INFORMATION. APPROVED PRODUCT SHALL BE CULTEC OR EQUAL.

0 5 10 FT.
1"=5'

NO.	DATE	REVISION	BY	APVD

DSGN C.ONEILL | DR C.ONEILL | CHK M.SCHMITZ | APVD

120 ST JAMES AVENUE
5TH FLOOR
BOSTON, MA 02116

CSO PROGRAM MANAGER
BELLEVUE AVENUE AND LEDGE ROAD
CATCH BASIN DISCONNECTION
CITY OF NEWPORT, RHODE ISLAND
DEPARTMENT OF UTILITIES

Jacobs

CIVIL
INFILTRATION SYSTEM PLANS

AS NOTED
VERIFY SCALE
BAR IS ONE INCH ON ORIGINAL DRAWING.
0 1"

DATE	JULY 2026
PROJ	D3258803
DWG	C-204
SHEET	009 of 20

© JACOBS 2024. ALL RIGHTS RESERVED.
REUSE OF DOCUMENTS: THIS DOCUMENT, AND THE IDEAS AND DESIGNS INCORPORATED HEREIN, AS AN INSTRUMENT OF PROFESSIONAL SERVICE, IS THE PROPERTY OF JACOBS AND IS NOT TO BE USED, IN WHOLE OR IN PART, FOR ANY OTHER PROJECT WITHOUT THE WRITTEN AUTHORIZATION OF JACOBS.

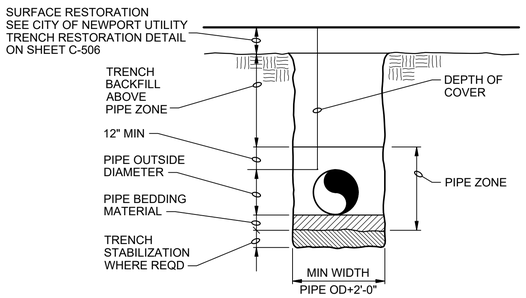

NOTES:

1. BACKFILL PER CITY OF NEWPORT FIGURE 7.01 ON SHEET C-506.
2. REFER TO SPECIFICATION SECTION 31 23 23, TRENCH BACKFILL, FOR BACKFILL MATERIAL REQUIREMENTS.
3. CRUSHED STONE SHALL BE WRAPPED IN GEOTEXTILE WHEN PLACED UNDER PAVED ROADWAY.

1 TYPICAL UTILITY TRENCH

NTS

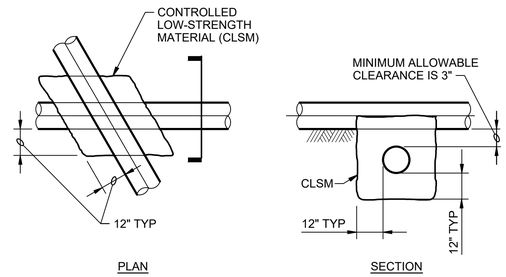

NOTES:

CLSM SUPPORT IS REQUIRED:

1. WHEN BOTH PIPELINES ARE NEW AND CLEARANCE BETWEEN THEM IS LESS THAN 12".
2. WHEN A NEW PIPELINE IS CROSSING OVER AN EXISTING PIPELINE AND THE CLEARANCE BETWEEN THEM WAS LESS THAN 12".
3. AT ALL PIPE CROSSINGS WHERE A NEW PIPELINE IS CROSSING UNDER AN EXISTING PIPELINE.
4. REFER TO SPECIFICATION SECTION 31 23 23.15 FOR CLSM REQUIREMENTS.

2 TRENCH PIPE CROSSING

NTS

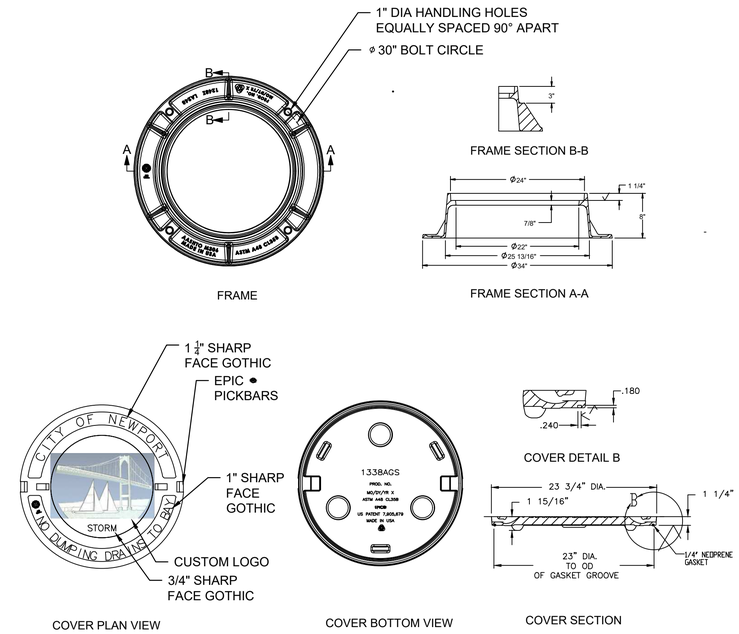

3 MANHOLE FRAME AND COVER

NTS

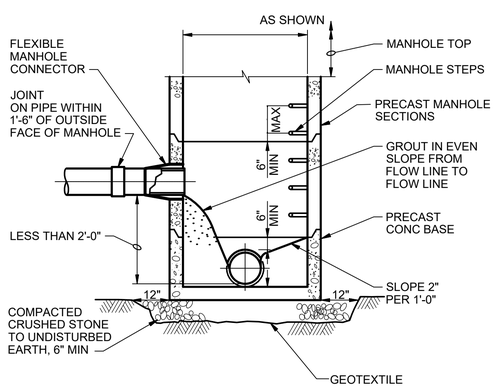

NOTE:

UNLESS SHOWN OTHERWISE IN THE DRAWINGS, THE DROP IN PIPE INVERT ELEVATION ACROSS THE MANHOLE SHALL BE 0.1 FEET, EXCEPT WHERE AN INCREASE IN PIPE DIAMETER OCCURS, MATCH PIPE CROWNS.

4 MANHOLE BASE SECTION 6" TO 24" PIPE

NTS

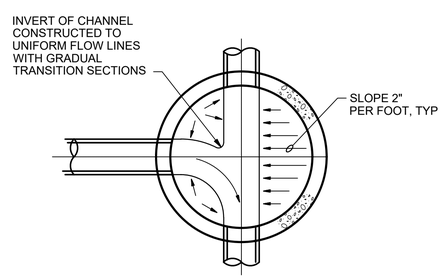

5 MANHOLE CHANNEL INTERSECTION

NTS

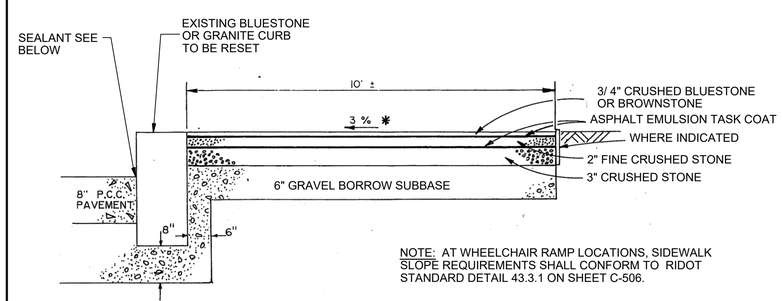

NOTE: AT WHEELCHAIR RAMP LOCATIONS, SIDEWALK SLOPE REQUIREMENTS SHALL CONFORM TO RIDOT STANDARD DETAIL 43.3.1 ON SHEET C-506.

NOTE:

IF CURBING IS SEPARATED FROM CONCRETE SLAB, CONTRACTOR SHALL INSTALL BUTYL ADHESIVE TAPE PRIOR TO RESETTING CURB

6 CRUSHED STONE SIDEWALK

NTS

NO.	DATE	REVISION	BY	APVD

DSGN C.ONEILL | DR E.SHERIFI | CHK M.SCHMITZ | APVD

Jacobs
120 ST JAMES AVENUE
5TH FLOOR
BOSTON, MA 02116

CSO PROGRAM MANAGER
BELLEVUE AVENUE AND LEDGE ROAD
CATCH BASIN DISCONNECTION
CITY OF NEWPORT, RHODE ISLAND
DEPARTMENT OF UTILITIES

CIVIL
STANDARD DETAILS

REUSE OF DOCUMENTS: THIS DOCUMENT, AND THE IDEAS AND DESIGNS INCORPORATED HEREIN, AS AN INSTRUMENT OF PROFESSIONAL SERVICE, IS THE PROPERTY OF JACOBS AND IS NOT TO BE USED, IN WHOLE OR IN PART, FOR ANY OTHER PROJECT WITHOUT THE WRITTEN AUTHORIZATION OF JACOBS.
© JACOBS 2024. ALL RIGHTS RESERVED.

NTS
VERIFY SCALE
BAR IS ONE INCH ON ORIGINAL DRAWING.
0 1"

DATE	JULY 2026
PROJ	D3258803
DWG	C-501
SHEET	010 of 20

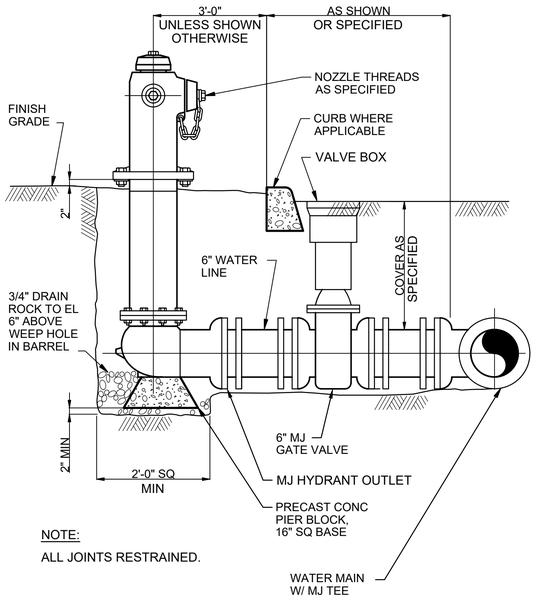

NOTE:

ALL JOINTS RESTRAINED.

1 FIRE HYDRANT

NTS

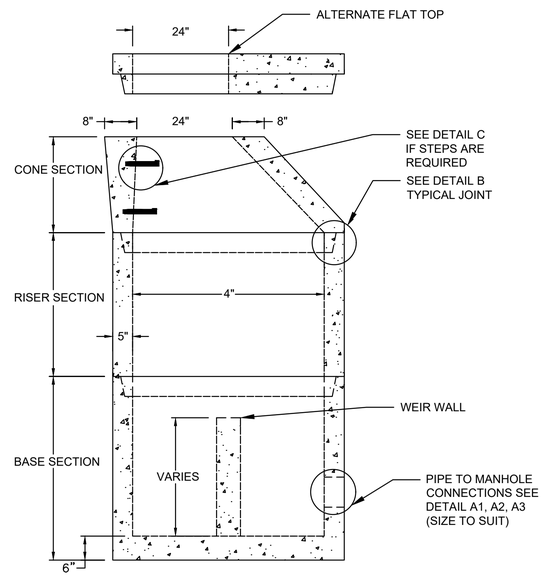

NOTE:

1. STRUCTURE SHALL BE IN ACCORDANCE WITH SECTION 702 OF THE RHODE ISLAND STANDARD SPECIFICATIONS, AND RHODE ISLAND STANDARD DETAIL 4.2.0 ON SHEET C-504.

2 4' DIA. MANHOLE WITH WEIR

NTS

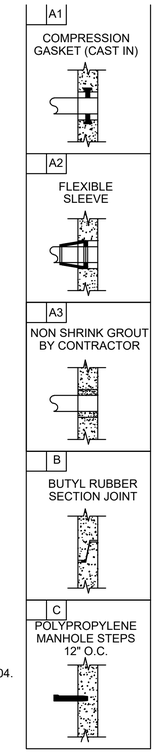

SHEET NOTES:

1. WATER DETAILS PROVIDED FOR REPAIR OR RELOCATION OF WATER MAIN IF NEEDED.

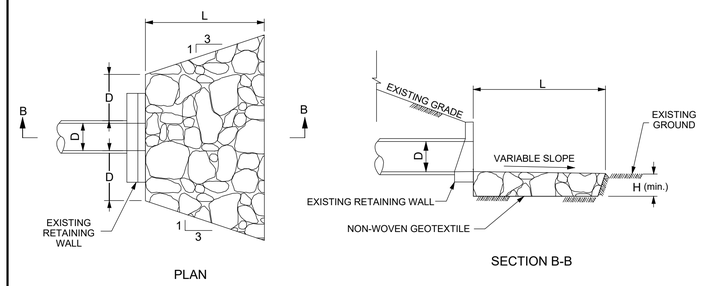

PLAN

SECTION B-B

NOTES:

1. DIAMETER (D) SHALL BE 12".
2. LENGTH (L) SHALL BE 9'.
3. HEIGHT (H) SHALL BE 1.5'
4. RIPRAP SHALL BE CLASS 3.

3 FHWA RIPRAP

NTS

NOTE:

1. IF EXISTING LEAD SERVICES WERE FOUND, USED TRANSITION COUPLING AS SPECIFIED IN SECTION 33 12 13.

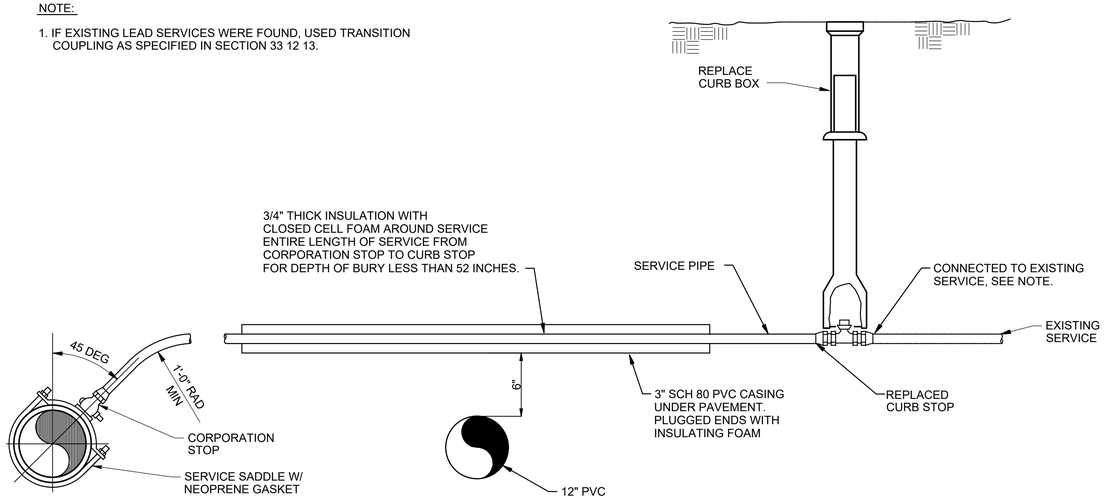

4 WATER SERVICE INSTALLATION

NTS

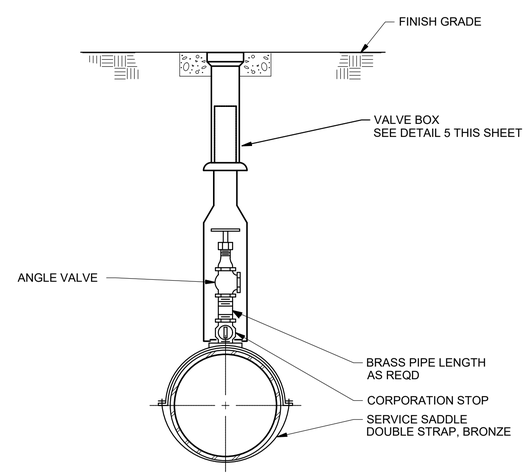

NOTES:

1. CORPORATION STOP, PIPE AND ANGLE VALVE TO BE 1 INCH DIAMETER.

5 AIR RELEASE VALVE ASSEMBLY

NTS

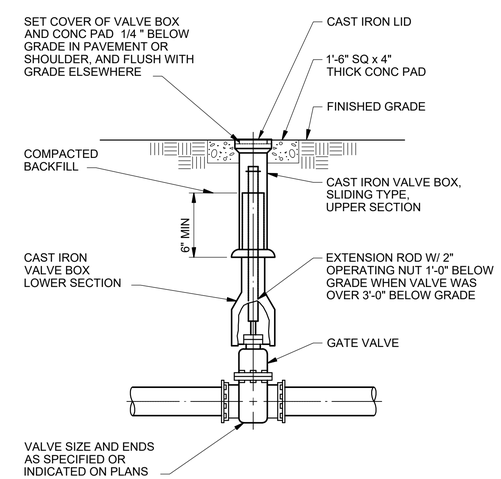

6 BURIED GATE VALVE BOX

NTS

NO.	DATE	REVISION	BY	APVD

DSGN C.ONEILL | DR E.SHERIFI | CHK M.SCHMITZ | APVD

120 ST JAMES AVENUE
5TH FLOOR
BOSTON, MA 02116

CSO PROGRAM MANAGER
BELLEVUE AVENUE AND LEDGE ROAD
CATCH BASIN DISCONNECTION
CITY OF NEWPORT, RHODE ISLAND
DEPARTMENT OF UTILITIES

Jacobs

CIVIL
STANDARD DETAILS

NTS

VERIFY SCALE

BAR IS ONE INCH ON ORIGINAL DRAWING.
0 1"

DATE	JULY 2026
PROJ	D3258803
DWG	C-502
SHEET	011 of 20

© JACOBS 2024. ALL RIGHTS RESERVED.

REUSE OF DOCUMENTS: THIS DOCUMENT, AND THE IDEAS AND DESIGNS INCORPORATED HEREIN, AS AN INSTRUMENT OF PROFESSIONAL SERVICE, IS THE PROPERTY OF JACOBS AND IS NOT TO BE USED, IN WHOLE OR IN PART, FOR ANY OTHER PROJECT WITHOUT THE WRITTEN AUTHORIZATION OF JACOBS.

FED.ROAD DIV. NO.	STATE	FEDERAL AID PROJECT NO.	FISCAL YEAR	SHEET NO.	TOTAL SHEETS
	R.I.			4	79

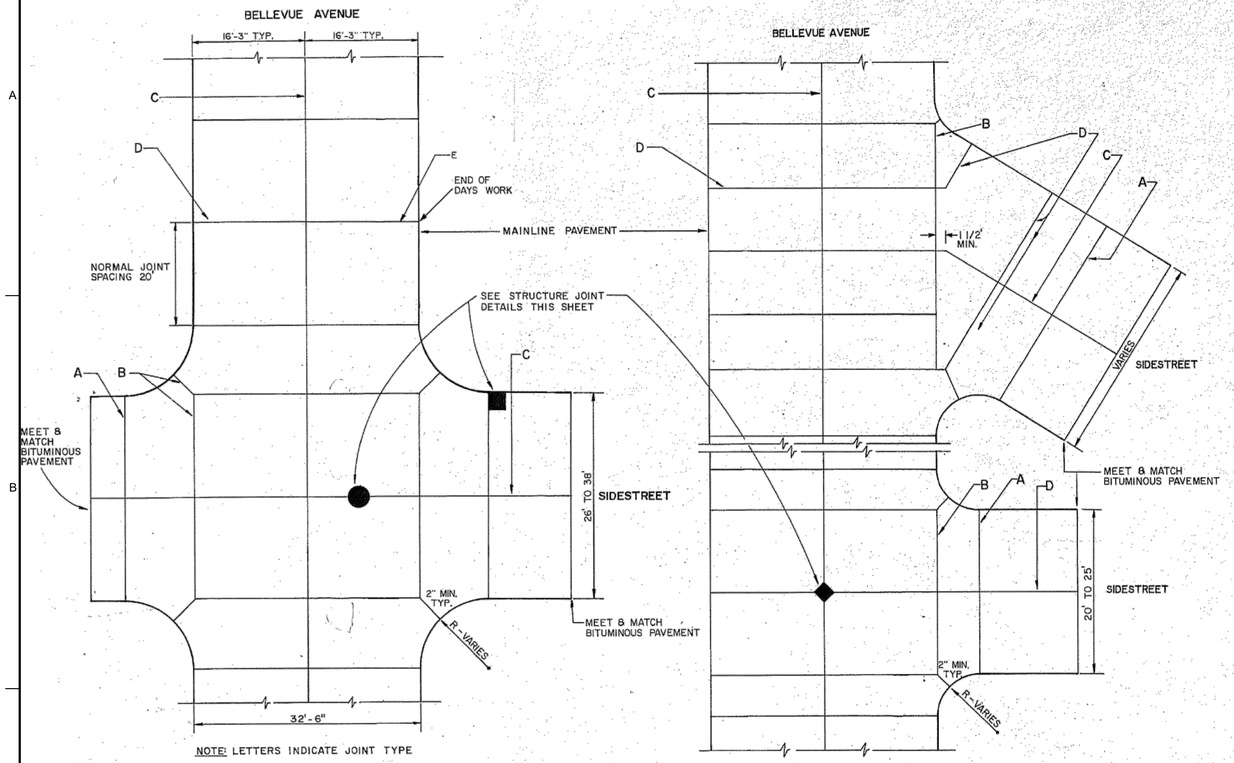

NOTE: LETTERS INDICATE JOINT TYPE

TYPICAL JOINT LOCATIONS
NOT TO SCALE

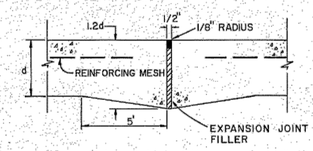

TYPE A
EXPANSION JOINT

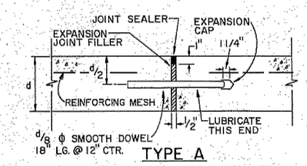

TYPE A
ALTERNATE EXPANSION JOINT

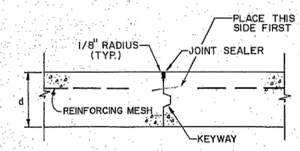

TYPE B
LONGITUDINAL CONSTRUCTION JOINT

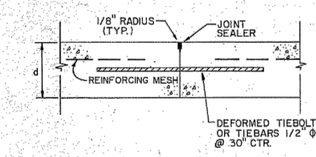

TYPE C
TIED BUTT LONGITUDINAL CONSTRUCTION JOINT

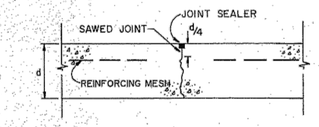

TYPE D
SAWED LONGITUDINAL OR TRANSVERSE JOINT

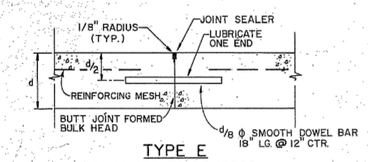

TYPE E
PLANNED TRANSVERSE CONSTRUCTION JOINT

JOINT DETAILS
NOT TO SCALE

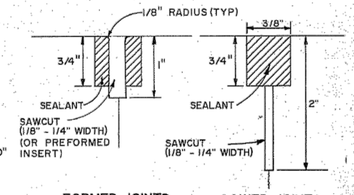

JOINT SEALANT RESERVOIR DETAIL

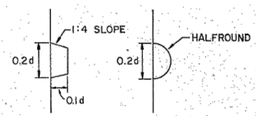

KEYWAYS FOR TYPE 'B' JOINT
CONSTRUCTION JOINTS

JOINT NOTES
1. TYPE E JOINT TO BE USED AT NORMAL JOINT SPACING AND AT END OF DAYS WORK.
2. ALL JOINT SEALANT SHALL BE BLACK.
3. SILICONE JOINT SEALER ON ALL JOINTS.
4. EXPANSION JOINT FILLER SHALL BE RUBBERIZED ASPHALT.

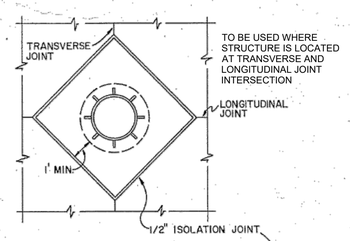

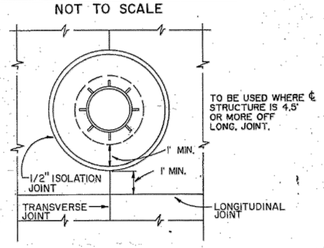

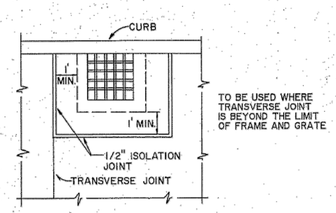

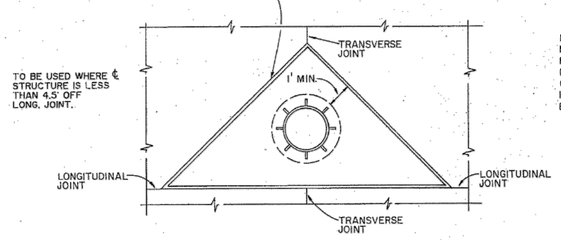

MANHOLES

NOTE: THE CONTRACTOR MAY WISH TO MODIFY THE JOINT LOCATION DUE TO FIELD CONDITIONS. SHOULD JOINT MODIFICATIONS BE REQUESTED, THE CONTRACTOR SHALL SUBMIT THE REQUEST IN WRITING FOR APPROVAL BY THE ENGINEER.

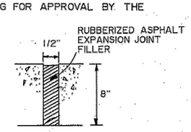

TYPICAL ISOLATION JOINT

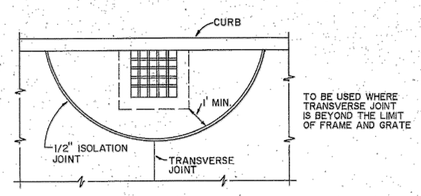

DRAINAGE STRUCTURES

STRUCTURE JOINT DETAILS
NOT TO SCALE

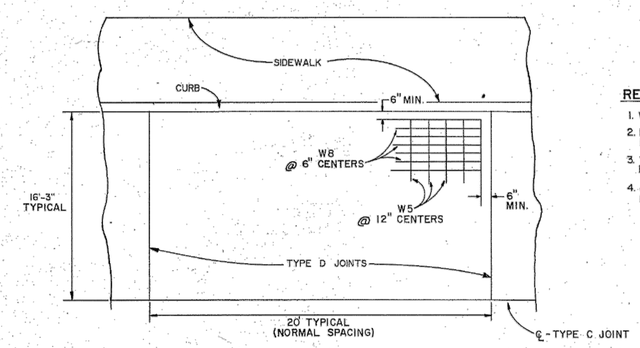

TYPICAL SLAB DETAIL
NOT TO SCALE

REINFORCEMENT NOTES:
1. WELDED WIRE FABRIC SHALL CONFORM TO ASTM-A82.
2. REINFORCING STEEL SHALL BE LOCATED 2-1/2" - 3-1/2" BELOW THE PAVEMENT SURFACE.
3. TYPICAL MAT SIZES ARE 15' X 19' SPECIAL SIZES REQUIRED AT INTERSECTIONS & WHERE ROADWAY WIDTH VARIES.
4. JOINTED AREAS LESS THAN 10 SQUARE FEET SHALL NOT HAVE MESH REINFORCEMENT.

REVISIONS		
NO.	DATE	BY

RONALD M. ASH & ASSOCIATES, INC.
• consulting engineers • construction managers • architects • planners

RHODE ISLAND
DEPARTMENT OF TRANSPORTATION
DIVISION OF PUBLIC WORKS

3R IMPROVEMENTS TO
BELLEVUE AVENUE
NEWPORT, RHODE ISLAND

PAVEMENT DETAILS

CHECKED BY_____ DATE_____ SCALE NO SCALE

NO.	DATE	REVISION	BY	APVD

DSGN C.O'NEILL | DR E.SHERIFI | CHK M.SCHMITZ | APVD

Jacobs
120 ST JAMES AVENUE
5TH FLOOR
BOSTON, MA 02116

CSO PROGRAM MANAGER
BELLEVUE AVENUE AND LEDGE ROAD
CATCH BASIN DISCONNECTION
CITY OF NEWPORT, RHODE ISLAND
DEPARTMENT OF UTILITIES

CIVIL
STANDARD DETAILS

NTS
VERIFY SCALE
BAR IS ONE INCH ON ORIGINAL DRAWING.
0 1"

DATE	JULY 2026
PROJ	D3258803
DWG	C-503
SHEET	012 of 20

© JACOBS 2024. ALL RIGHTS RESERVED.
REUSE OF DOCUMENTS: THIS DOCUMENT, AND THE IDEAS AND DESIGNS INCORPORATED HEREIN, AS AN INSTRUMENT OF PROFESSIONAL SERVICE, IS THE PROPERTY OF JACOBS AND IS NOT TO BE USED, IN WHOLE OR IN PART, FOR ANY OTHER PROJECT WITHOUT THE WRITTEN AUTHORIZATION OF JACOBS.

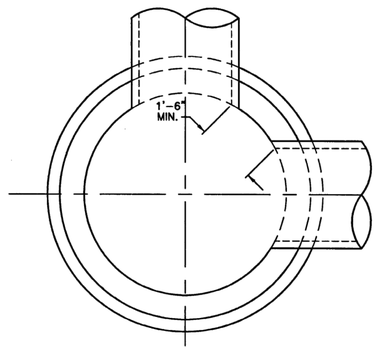

CROSS SECTION OF MANHOLE OR CATCH BASIN

	4 FT. MANHOLE OR CATCH BASIN	5 FT. MANHOLE OR CATCH BASIN	6 FT. MANHOLE OR CATCH BASIN
MAX. PIPE O.D. STRAIGHT THRU TO 45° DEFLECTION	33 1/2" O.D. 27" R.C. PIPE	44" O.D. 36" R.C. PIPE	51" O.D. 42" R.C. PIPE
MAX. PIPE O.D. 90° DEFLECTION	23" O.D. 18" R.C. PIPE	33 1/2" O.D. 27" R.C. PIPE	37" O.D. 30" R.C. PIPE

NOTE:
1. SHALL BE IN ACCORDANCE WITH SECTION 702 OF THE R.I. STANDARD SPECIFICATIONS.
2. THE MINIMUM DISTANCE BETWEEN PIPES ENTERING MANHOLES AND CATCH BASINS MUST BE 1'-6". THE SIZE OF THE CATCH BASIN WILL BE DETERMINED BY THE PIPE SIZE AND ENTRY ANGLE. (SEE TABLE ABOVE.)

RHODE ISLAND DEPARTMENT OF TRANSPORTATION

REVISIONS: NO. | BY | DATE

ROUND MANHOLES AND CATCH BASINS MAXIMUM PIPE SIZE STANDARD

CHIEF ENGINEER TRANSPORTATION — CHIEF DESIGN ENGINEER TRANSPORTATION — JUNE 15, 1998 ISSUE DATE

R.I. STANDARD 5.2.0

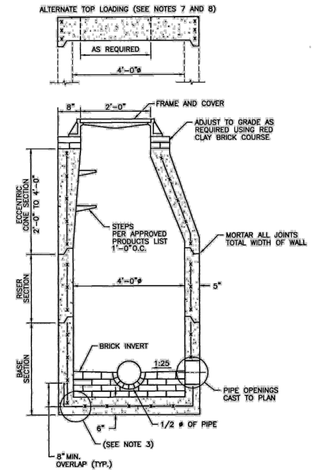

NOTES:
1. SHALL BE IN ACCORDANCE WITH SECTION 702 OF THE R.I. STANDARD SPECIFICATIONS.
2. CIRCUMFERENTIAL STEEL REINFORCEMENT REQUIRED = 0.12 SQ. IN. / LIN. FT. MINIMUM.
3. STEEL REINFORCEMENT FOR BASE SECTION BOTTOM SHALL BE A MINIMUM OF 0.12 SQ. IN/LIN. FT. (BOTH WAYS).
4. ONE POUR MONOLITHIC BASE SECTION.
5. ANY NECESSARY ADJUSTMENTS DURING CONSTRUCTION WILL BE DONE BY SAW-CUTTING AND/OR CORING ONLY. NO JACKHAMMERS, HAMMERS AND CHISELS OR PNEUMATIC TOOLS WILL BE ALLOWED.
6. STEPS SHALL CONFORM TO STD. 5.3.0 AND SHALL BE INSTALLED AT THE CASTING PLANT.
7. ALTERNATE TOP SLAB IS STEEL REINFORCED TO MEET OR EXCEED H-25 LOADING (SEE STD. 4.7.2).
8. ALTERNATE TOP SLAB IS ONLY FOR USE WHEN REDUCING SECTION DOES NOT FIT BECAUSE OF STRUCTURE DEPTH.
9. REFER TO STD. 5.2.0 FOR MAXIMUM PIPE SIZES.

RHODE ISLAND DEPARTMENT OF TRANSPORTATION

REVISIONS: NO. | BY | DATE

PRECAST 4'-0" ROUND MANHOLE

CHIEF ENGINEER TRANSPORTATION — CHIEF DESIGN ENGINEER TRANSPORTATION — JUNE 15, 1998 ISSUE DATE

R.I. STANDARD 4.2.0

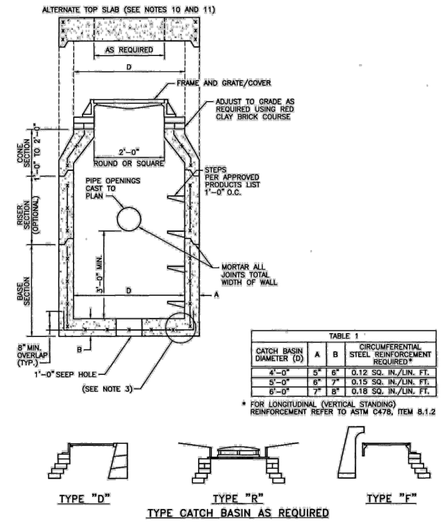

TYPE CATCH BASIN AS REQUIRED

TABLE 1			
CATCH BASIN DIAMETER (D)	A	B	CIRCUMFERENTIAL STEEL REINFORCEMENT REQUIRED*
4'-0"	5"	6"	0.12 SQ. IN./LIN. FT.
5'-0"	6"	7"	0.15 SQ. IN./LIN. FT.
6'-0"	7"	8"	0.18 SQ. IN./LIN. FT.

* FOR LONGITUDINAL (VERTICAL STANDING) REINFORCEMENT REFER TO ASTM C478, ITEM 8.1.2

NOTES:
1. SHALL BE IN ACCORDANCE WITH SECTION 702 OF THE R.I. STANDARD SPECIFICATIONS.
2. SEE TABLE 1 FOR STEEL REINFORCEMENT REQUIREMENTS.
3. STEEL REINFORCEMENT FOR BASE SECTION BOTTOM SHALL BE A MINIMUM OF 0.12 SQ. IN./LIN. FT. (BOTH WAYS).
4. STEPS SHALL CONFORM TO STD. 5.3.0 AND SHALL BE INSTALLED AT THE CASTING PLANT.
5. ONE POUR MONOLITHIC BASE SECTION.
6. ANY NECESSARY ADJUSTMENTS DURING CONSTRUCTION WILL BE DONE BY SAW-CUTTING AND/OR CORING ONLY. NO JACKHAMMERS, HAMMERS AND CHISELS OR PNEUMATIC TOOLS WILL BE ALLOWED.
7. CORBEL MADE OF RED CLAY BRICK WILL BE PERMITTED FOR THE "CONE SECTION" OF THE 4'-0" CATCH BASIN ONLY.
8. FOR CATCH BASIN TYPES "D" AND "F" STEPS MUST BE INSTALLED ON THE CURB SIDE OF THE STRUCTURE.
9. THE CENTERLINE OF THE OPENING MUST BE WITHIN 2'-0" FROM THE STEPS.
10. ALTERNATE TOP SLAB IS STEEL REINFORCED TO MEET OR EXCEED H-25 LOADING (SEE STD. 4.7.2).
11. ALTERNATE TOP SLAB IS ONLY FOR USE WHEN REDUCING SECTION DOES NOT FIT BECAUSE OF STRUCTURE DEPTH.
12. REFER TO STD. 5.2.0 FOR MAXIMUM PIPE SIZES.

RHODE ISLAND DEPARTMENT OF TRANSPORTATION

REVISIONS: NO. | BY | DATE

PRECAST 4'-0", 5'-0", OR 6'-0" ROUND CATCH BASIN

CHIEF ENGINEER TRANSPORTATION — CHIEF DESIGN ENGINEER TRANSPORTATION — JUNE 15, 1998 ISSUE DATE

R.I. STANDARD 4.4.0

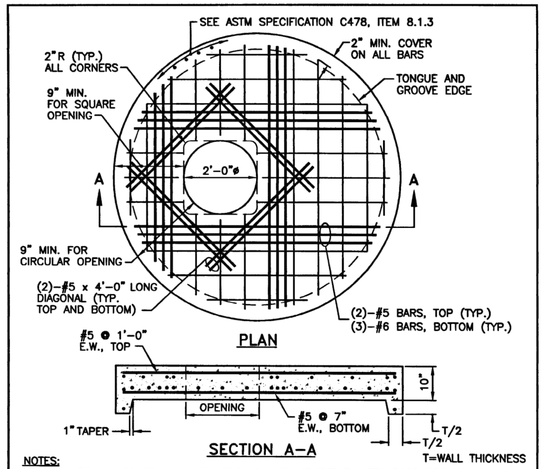

SECTION A-A

NOTES:
1. SHALL BE IN ACCORDANCE WITH SECTION 702 OF THE R.I. STANDARD SPECIFICATIONS.
2. ANY NECESSARY ADJUSTMENTS DURING CONSTRUCTION WILL BE DONE BY SAW-CUTTING AND/OR CORING ONLY. NO JACKHAMMERS, HAMMERS AND CHISELS OR PNEUMATIC TOOLS WILL BE ALLOWED.
3. THE CENTER LINE OF THE OPENING MUST BE WITHIN 2" FROM THE STEPS.
4. ALTERNATE TOP COVER IS STEEL REINFORCED TO MEET OR EXCEED H-25 OR HS-25 LOADINGS WITH EARTH PRESSURES INCLUDED. THIS IMPLIES THAT THE TOP SLAB IS DESIGNED FOR AXLE LOADS OF NO MORE THAN 20 TONS.
5. ALL REBAR SHALL HAVE A MINIMUM OF 2" CLEARANCE FROM OPENING.
6. ALL REBARS IN THE BOTTOM MAT ARE #5 @ 2", BOTH WAYS, WITH 2" MINIMUM COVER, EXCEPT FOR REBARS ADJACENT TO THE OPENING. THESE BARS SHALL BE (3)-#6 SHOWN WITH A HEAVIER LINE FOR CLARITY). REBARS IN THE TOP MAT ARE #5 @ 1'-0", BOTH WAYS, WITH 2" MINIMUM COVER, EXCEPT FOR REBARS ADJACENT TO THE OPENING. THESE BARS SHALL BE (2)-#5 BARS.

RHODE ISLAND DEPARTMENT OF TRANSPORTATION

REVISIONS: NO. | BY | DATE

ALTERNATE TOP COVER FOR ROUND PRECAST MANHOLES AND CATCH BASINS

CHIEF ENGINEER TRANSPORTATION — CHIEF DESIGN ENGINEER TRANSPORTATION — JUNE 15, 1998 ISSUE DATE

R.I. STANDARD 4.7.2

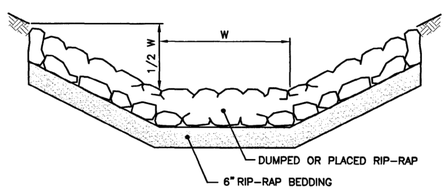

NOTES:
1. SLOPES MAY VARY TO SUIT CONDITIONS AS PER PLANS OR ENGINEER.
2. RIP-RAP AND BEDDING SIZE MAY VARY. SEE CONTRACT DOCUMENTS.

RHODE ISLAND DEPARTMENT OF TRANSPORTATION

REVISIONS: NO. | BY | DATE

RIP-RAP DITCH

CHIEF ENGINEER TRANSPORTATION — CHIEF DESIGN ENGINEER TRANSPORTATION — JUNE 15, 1998 ISSUE DATE

R.I. STANDARD 8.3.0

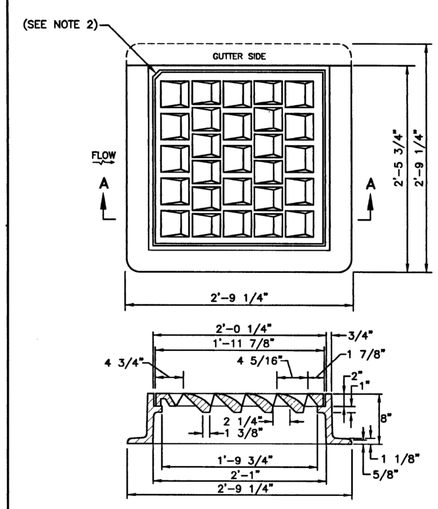

SECTION A-A

NOTES:
1. FRAME AND COVER SHALL CONFORM TO SECTION M.04 OF THE R.I. STANDARD SPECIFICATIONS.
2. THIS CORNER LEFT FOR "LEFT" GRATE, DIAGONALLY OPPOSITE CORNER FOR "RIGHT" GRATE TO FIT IN KEYED FRAME.

RHODE ISLAND DEPARTMENT OF TRANSPORTATION

REVISIONS: NO. | BY | DATE

HIGH CAPACITY FRAME AND GRATE (BICYCLE SAFE)

CHIEF ENGINEER TRANSPORTATION — CHIEF DESIGN ENGINEER TRANSPORTATION — JUNE 15, 1998 ISSUE DATE

R.I. STANDARD 6.3.4

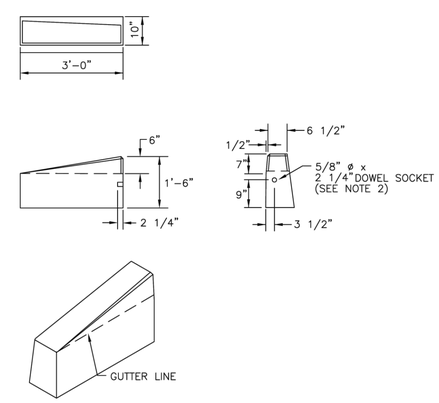

NOTES:
1. SHALL BE IN ACCORDANCE WITH SECTION 906 OF THE R.I. STANDARD SPECIFICATIONS.
2. DRAWING SHOWS TRANSITION CURB FOR ONE DIRECTION, FOR OTHER DIRECTION USE OPPOSITE HAND AND INCLUDE A 1/2" ø x 4" EPOXY COATED DOWEL.
3. EXPOSED SURFACES TO HAVE A SPONGE FLOAT FINISH.
4. EXPOSED EDGES TO HAVE A 3/4" CHAMFER.
5. LEFT AND RIGHT SECTIONS SHALL BE INSTALLED AS REQUIRED.

RHODE ISLAND DEPARTMENT OF TRANSPORTATION

REVISIONS:

NO.	BY	DATE
1	MLP	Mar 05
2	MLP	06/01/10

3'-0" PRECAST CONCRETE TRANSITION CURB

CHIEF ENGINEER TRANSPORTATION — CHIEF DESIGN ENGINEER TRANSPORTATION — JUNE 15, 1998 ISSUE DATE

R.I. STANDARD 7.1.1

NO.	DATE	REVISION	BY	APVD

DSGN C.O'NEILL | DR E.SHERIFI | CHK M.SCHMITZ | APVD

120 ST JAMES AVENUE
5TH FLOOR
BOSTON, MA 02116

CSO PROGRAM MANAGER

BELLEVUE AVENUE AND LEDGE ROAD CATCH BASIN DISCONNECTION

CITY OF NEWPORT, RHODE ISLAND DEPARTMENT OF UTILITIES

Jacobs

CIVIL

STANDARD DETAILS

REUSE OF DOCUMENTS: THIS DOCUMENT, AND THE IDEAS AND DESIGNS INCORPORATED HEREIN, AS AN INSTRUMENT OF PROFESSIONAL SERVICE, IS THE PROPERTY OF JACOBS AND IS NOT TO BE USED, IN WHOLE OR IN PART, FOR ANY OTHER PROJECT WITHOUT THE WRITTEN AUTHORIZATION OF JACOBS.

© JACOBS 2024. ALL RIGHTS RESERVED.

NTS

VERIFY SCALE

BAR IS ONE INCH ON ORIGINAL DRAWING. 0 — 1"

DATE	JULY 2026
PROJ	D3258803
DWG	C-504
SHEET	013 of 20

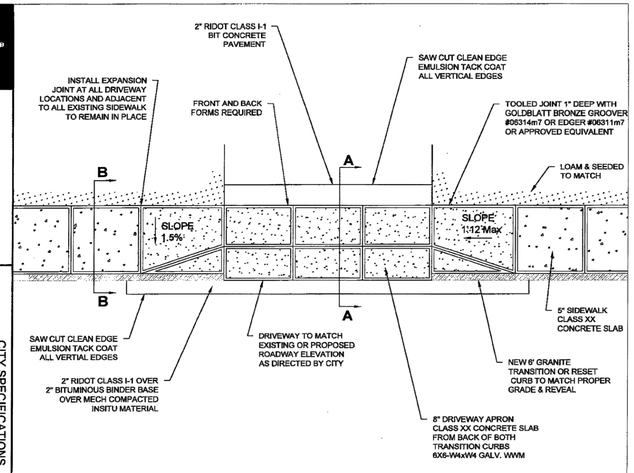

Note: 1. All work shall be in accordance with The City of Newport Standard Specifications for Construction Within the City Right-of-way, and The Rhode Island Standard Specifications for Road and Bridge Construction, amended December 2010 with all latest revisions.

NEWPORT FOUNDED 1639

CITY OF NEWPORT
DEPARTMENT OF PUBLIC SERVICES
DRAWN BY FJM

CITY SPECIFICATIONS
CONCRETE SIDEWALK AND DRIVEWAY DETAIL

REVISION DATE:	SCALE	FIGURE
JULY 2014	1"=5'	2.01

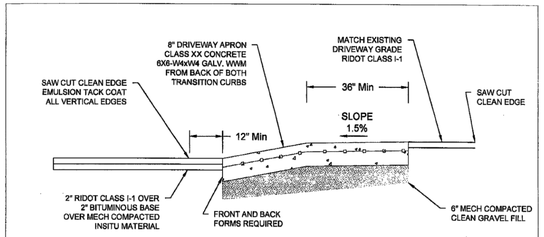

CONCRETE DRIVEWAY APRON A-A

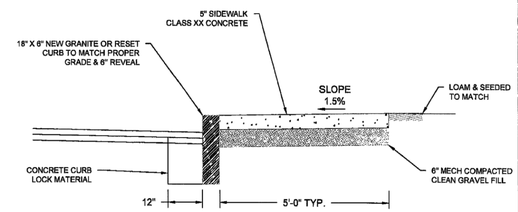

CONCRETE SIDEWALK B-B

Note: 1. All work shall be in accordance with The City of Newport Standard Specifications for Construction Within the City Right-of-way, and The Rhode Island Standard Specifications for Road and Bridge Construction, amended December 2010 with all latest revisions.

NEWPORT FOUNDED 1639

CITY OF NEWPORT
DEPARTMENT OF PUBLIC SERVICES
DRAWN BY FJM

CITY SPECIFICATIONS
CONCRETE SIDEWALK AND DRIVEWAY CROSS-SECTION DETAIL

REVISION DATE:	SCALE	FIGURE
JULY 2014	1"=2'	2.02

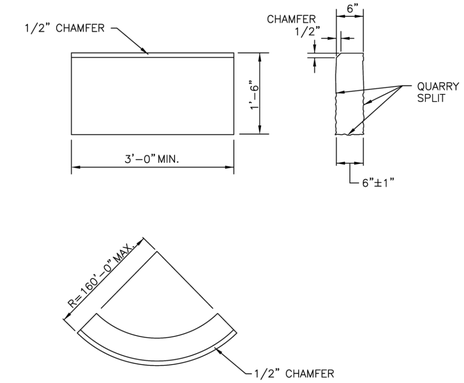

CIRCULAR CURB

NOTES:
1. SHALL BE IN ACCORDANCE WITH SECTION 906 OF THE R.I. STANDARD SPECIFICATIONS.
2. TOP SURFACE TO BE DRESSED BY SAW. REMAINDER MAY BE QUARRY SPLIT.
3. MINIMUM LENGTH OF STRAIGHT OR CIRCULAR PIECES TO BE 3'-0".
4. CIRCULAR CURB IS REQUIRED ON CURVES WITH RADII OF 160'-0" OR LESS. STRAIGHT CURB TO BE USED ON CURVES OF MORE THAN 160'-0" RADIUS.

RHODE ISLAND DEPARTMENT OF TRANSPORTATION

REVISIONS		
NO.	BY	DATE
1	MLP	Mar 2005
2	MLP	Sep 2012

GRANITE CURB

CHIEF ENGINEER TRANSPORTATION — CHIEF DESIGN ENGINEER TRANSPORTATION — JUNE 15, 1998 ISSUE DATE

R.I. STANDARD 7.3.0

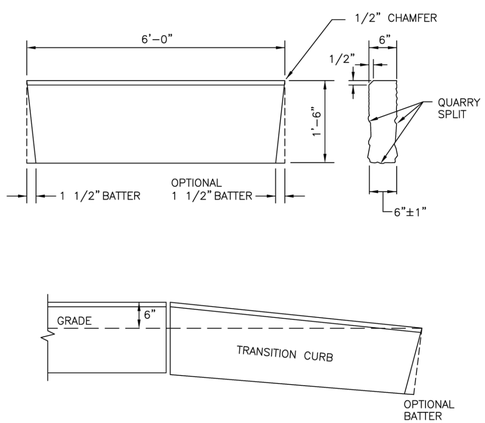

NOTES:
1. SHALL BE IN ACCORDANCE WITH SECTION 906 OF THE R.I. STANDARD SPECIFICATIONS.
2. THE CONTRACTOR MAY CUT EXISTING CURB SECTIONS AS REQUIRED TO MEET THIS DETAIL AND THE R.I. STANDARD SPECIFICATIONS, WHERE OLD CURBING IS BEING REUSED.
3. TOP SURFACE TO BE DRESSED BY SAW. REMAINDER MAY BE QUARRY SPLIT.

RHODE ISLAND DEPARTMENT OF TRANSPORTATION

REVISIONS		
NO.	BY	DATE
1	MLP	Mar 2005
2	MLP	Sep 2012

6'-0" GRANITE TRANSITION CURB

CHIEF ENGINEER TRANSPORTATION — CHIEF DESIGN ENGINEER TRANSPORTATION — JUNE 15, 1998 ISSUE DATE

R.I. STANDARD 7.3.2

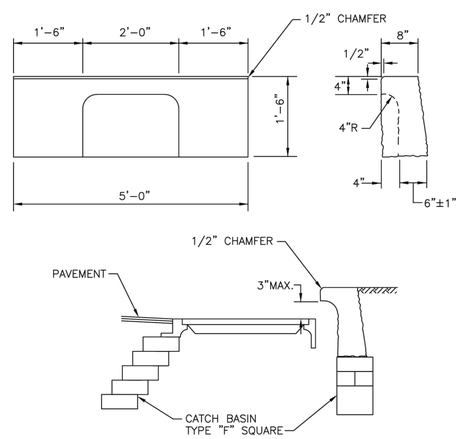

NOTES:
1. SHALL BE IN ACCORDANCE WITH SECTION 906 OF THE R.I. STANDARD SPECIFICATIONS.
2. TOP SURFACE TO BE DRESSED BY SAW. REMAINDER MAY BE QUARRY SPLIT.

RHODE ISLAND DEPARTMENT OF TRANSPORTATION

REVISIONS		
NO.	BY	DATE
1	MLP	Mar 2005
2	MLP	Sep 2012

GRANITE APRON STONE (FOR SQUARE CATCH BASIN)

CHIEF ENGINEER TRANSPORTATION — CHIEF DESIGN ENGINEER TRANSPORTATION — JUNE 15, 1998 ISSUE DATE

R.I. STANDARD 7.3.7

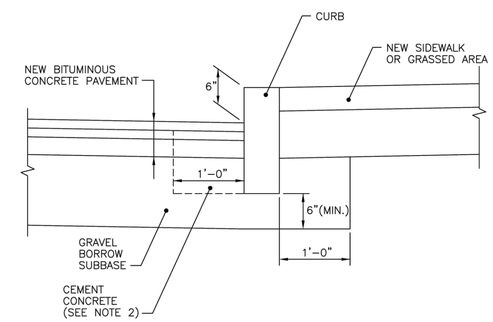

NOTES:
1. SHALL BE IN ACCORDANCE WITH SECTION 906 OF THE R.I. STANDARD SPECIFICATIONS.
2. CEMENT CONCRETE SHALL BE USED ONLY WHEN THE CURB IS SET AFTER THE BASE AND/OR BINDER COURSES ARE IN PLACE, OTHERWISE THE CEMENT CONCRETE WILL BE ELIMINATED AND THE GRAVEL BROUGHT UP TO BOTTOM OF THE BASE COURSE.
3. CONCRETE PAVEMENT SHALL BE INSTALLED AS SHOWN ON "TYPICAL SLAB DETAIL" ON SHEET C-503.

RHODE ISLAND DEPARTMENT OF TRANSPORTATION

REVISIONS		
NO.	BY	DATE
1	MLP	Mar 05

CURB SETTING DETAIL

CHIEF ENGINEER TRANSPORTATION — CHIEF DESIGN ENGINEER TRANSPORTATION — JUNE 15, 1998 ISSUE DATE

R.I. STANDARD 7.6.0

NO.	DATE	REVISION	CHK	APVD	BY	APVD

DSGN C.ONEILL DR E.SHERIFI CHK M.SCHMITZ

© JACOBS 2024. ALL RIGHTS RESERVED.

REUSE OF DOCUMENTS: THIS DOCUMENT, AND THE IDEAS AND DESIGNS INCORPORATED HEREIN, AS AN INSTRUMENT OF PROFESSIONAL SERVICE, IS THE PROPERTY OF JACOBS AND IS NOT TO BE USED, IN WHOLE OR IN PART, FOR ANY OTHER PROJECT WITHOUT THE WRITTEN AUTHORIZATION OF JACOBS.

120 ST JAMES AVENUE
5TH FLOOR
BOSTON, MA 02116

CSO PROGRAM MANAGER
BELLEVUE AVENUE AND LEDGE ROAD CATCH BASIN DISCONNECTION
CITY OF NEWPORT, RHODE ISLAND
DEPARTMENT OF UTILITIES

Jacobs

CIVIL
STANDARD DETAILS

NTS
VERIFY SCALE
BAR IS ONE INCH ON ORIGINAL DRAWING.
0 1"

DATE	JULY 2026
PROJ	D3258803
DWG	C-505
SHEET	014 of 20

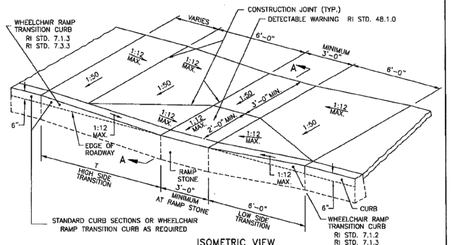

ISOMETRIC VIEW
NOT TO SCALE

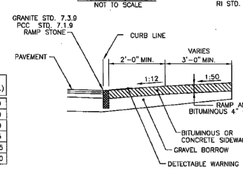

ROADWAY PROFILE GRADE	T (FT.)
0.00	6.0
0.01	7.0
0.02	8.0
0.03	9.5
0.04	11.5
0.05	15.0

SECTION A–A
NOT TO SCALE

NOTES:
1. SHALL BE IN ACCORDANCE WITH SECTION 905 OF THE RI STANDARD SPECIFICATIONS.
2. WHEN ANY OBSTRUCTION LOCATED IN THE SIDEWALK FALLS WITHIN A CROSSWALK AREA, THE WHEELCHAIR RAMP WILL BE PLACED SUCH THAT THE OBSTRUCTION FALLS OUTSIDE OF THE RAMP.
3. AT NO TIME IS ANY PART OF THE WHEELCHAIR RAMP TO BE LOCATED OUTSIDE OF THE CROSSWALK, AND IT IS TO BE CENTERED WHENEVER POSSIBLE.
4. DRAINAGE FACILITIES ARE TO BE LOCATED UP–GRADE OF ALL WHEELCHAIR RAMPS.
5. LOCATION OF WHEELCHAIR RAMPS IS AS SHOWN ON CONTRACT DRAWINGS.
6. IN NO INSTANCE SHALL THE SIDEWALK CROSS SLOPE EXCEED 1:50 EXCEPT WITHIN THE RAMP AREA.
7. AN UNOBSTRUCTED PATH OF TRAVEL WITH A MINIMUM WIDTH OF 3'–0" SHALL BE MAINTAINED.
8. THE WHEELCHAIR RAMP SLOPE AND SIDE SLOPES (TRANSITIONS), MUST NOT EXCEED 1:12. HOWEVER, THESE SLOPES MAY BE FLATTER THAN 1:12 WHEN WARRANTED BY SURROUNDING CONDITIONS.
9. WHERE THE ROAD PROFILE EXCEEDS 5% THE HIGH SIDE TRANSITION LENGTH (T) SHALL BE EIGHTEEN FEET (18'–0").
10. IN NO CASE, WHERE A STOP LINE IS WARRANTED, SHALL A RAMP BE PLACED BEHIND THE STOP LINE.
11. THE ENTRANCE OF THE WHEELCHAIR RAMP SHALL BE FLUSH WITH THE ROADWAY.
12. THE WHEELCHAIR RAMP SHALL BE CENTERED RADIALLY, OPPOSITE THE RADIUS POINT WHEN POSSIBLE.
13. MINIMUM LENGTH OF STRAIGHT OR CIRCULAR FILLER PIECES TO BE 3'–0" (GREATER LENGTHS PREFERRED).
14. ALL REQUIRED CUTTING OF CURB PIECES TO BE PAID FOR UNDER COST OF CURB.
15. DETECTABLE WARNINGS TO BE PAID FOR UNDER SECTION 942 OF THE RI STANDARD SPECIFICATIONS
16. 8" CONCRETE DEPTH FOR RADIUS WHEELCHAIR RAMPS ONLY. USE 4" DEPTH FOR TANGENT (MID–BLOCK) LOCATIONS.

RHODE ISLAND DEPARTMENT OF TRANSPORTATION

REVISIONS		
NO.	BY	DATE
1	MLP	Oct 05
2	MLP	6/27/08

WHEELCHAIR RAMP

CHIEF ENGINEER TRANSPORTATION — CHIEF DESIGN ENGINEER TRANSPORTATION — JUNE 15, 1998 ISSUE DATE

R.I. STANDARD 43.3.0

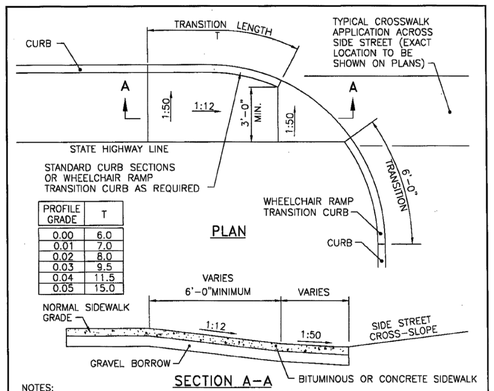

PROFILE GRADE	T
0.00	6.0
0.01	7.0
0.02	8.0
0.03	9.5
0.04	11.5
0.05	15.0

SECTION A–A

NOTES:
1. SHALL BE IN ACCORDANCE WITH SECTION 905 OF THE R.I. STANDARD SPECIFICATIONS.
2. THIS DETAIL IS TO BE USED ONLY WHEN STATE RIGHT–OF–WAY IS LIMITED TO BACK OF SIDEWALK, AND SIDEWALK IS NARROW WITH NO PEDESTRIAN TRAFFIC FROM SIDE STREET.
3. WHEN ANY OBSTRUCTION LOCATED IN THE SIDEWALK FALLS WITHIN A CROSSWALK AREA, IF POSSIBLE, THE OBSTRUCTION WILL BE PLACED SUCH THAT IT FALLS OUTSIDE OF THE RAMP.
4. AT NO TIME IS ANY PART OF THE WHEELCHAIR RAMP TO BE LOCATED OUTSIDE OF THE CROSSWALK, AND IT IS TO BE CENTERED WHENEVER POSSIBLE.
5. DRAINAGE FACILITIES ARE TO BE LOCATED UP–GRADE OF ALL WHEELCHAIR RAMPS.
6. LOCATION OF WHEELCHAIR RAMPS IS AS SHOWN ON CONTRACT DRAWINGS.
7. ALL REQUIRED CUTTING OF CURB PIECES TO BE PAID FOR UNDER COST OF CURB.
8. WHERE ANY PROFILE EXCEEDS 5% THE TRANSITION LENGTH (T) SHALL BE EIGHTEEN FEET (18'–0").
9. THE ENTRANCE OF THE WHEELCHAIR RAMP SHALL BE FLUSH WITH THE ROADWAY.
10. MINIMUM LENGTH OF STRAIGHT OR CIRCULAR FILLER PIECES TO BE 3'–0"(GREATER LENGTHS PREFERRED).
11. AN UNOBSTRUCTED PATH OF TRAVEL WITH A MINIMUM WIDTH OF 3'–0" SHALL BE MAINTAINED.

RHODE ISLAND DEPARTMENT OF TRANSPORTATION

REVISIONS		
NO.	BY	DATE
1	MLP	Dec 05

WHEELCHAIR RAMP FOR LIMITED RIGHT–OF–WAY AREAS

CHIEF ENGINEER TRANSPORTATION — CHIEF DESIGN ENGINEER TRANSPORTATION — JUNE 15, 1998 ISSUE DATE

R.I. STANDARD 43.3.1

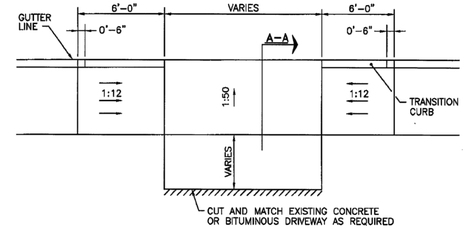

PLAN

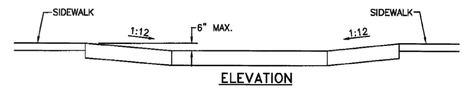

ELEVATION

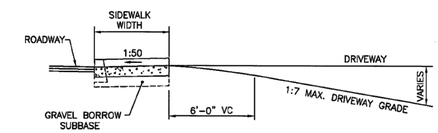

SECTION A–A

NOTE:
SHALL BE IN ACCORDANCE WITH SECTION 905 OF THE R.I. STANDARD SPECIFICATIONS.

RHODE ISLAND DEPARTMENT OF TRANSPORTATION

REVISIONS		
NO.	BY	DATE
1	MLP	3/1/05
2	MLP	6/27/08

DRIVEWAY DEVELOPMENT FOR 6'–0" TRANSITION CURB

CHIEF ENGINEER TRANSPORTATION — CHIEF DESIGN ENGINEER TRANSPORTATION — JUNE 15, 1998 ISSUE DATE

R.I. STANDARD 43.4.1

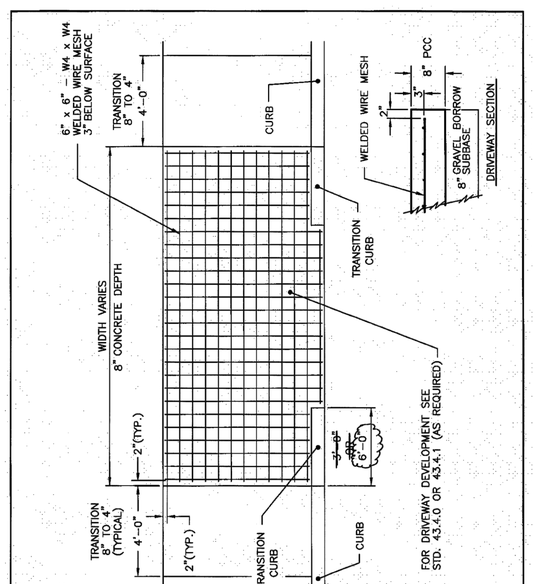

NOTE:
SHALL BE IN ACCORDANCE WITH SECTION 905 OF THE R.I. STANDARD SPECIFICATIONS.

RHODE ISLAND DEPARTMENT OF TRANSPORTATION

REVISIONS		
NO.	BY	DATE
1	MLP	1/10/05
2	MLP	7/21/08

CEMENT CONCRETE DRIVEWAYS

CHIEF ENGINEER TRANSPORTATION — CHIEF DESIGN ENGINEER TRANSPORTATION — JUNE 15, 1998 ISSUE DATE

R.I. STANDARD 43.5.0

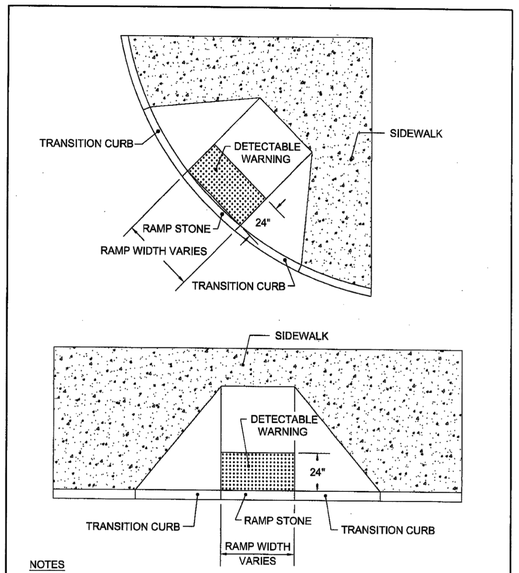

NOTES
1. DETECTABLE WARNING SYSTEM SHALL BE IN ACCORDANCE WITH SECTION 942 OF THE RI STANDARD SPECIFICATIONS

RHODE ISLAND DEPARTMENT OF TRANSPORTATION

REVISIONS		
NO.	BY	DATE
1	MLP	March 05

DETECTABLE WARNING SYSTEM

CHIEF ENGINEER TRANSPORTATION — CHIEF DESIGN ENGINEER TRANSPORTATION — JUNE 15, 1998 ISSUE DATE

R.I. STANDARD 48.1.0

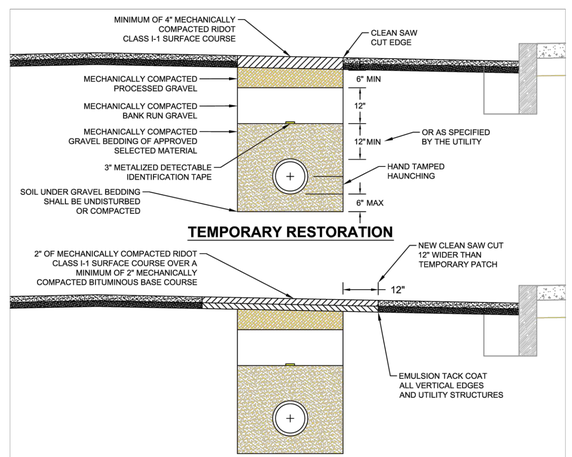

TEMPORARY RESTORATION

PERMANENT RESTORATION

Notes:
1. All excavations in the City Right-of-Way shall be in accordance with Newport City Codified Ordinance Section 12.08, City Standard Specifications for Construction within City Right-of-Way (with all latest revisions), the Rhode Island Standard Specifications for Road and Bridge Construction, amended December 2010 (with all latest revisions), and as directed by the Engineer.
2. Earthwork shall conform to RIDOT Part 200, including Section 205, Trench Excavation, and Section 202, Excavation, and Embankment. All material shall be placed in eight (8) inch loose lifts and be compacted to 95% max dry density. Nuclear density gauge certification may be required.
3. All backfill placed below a level of 12 inches above the top of pipe shall be deposited uniformly on both sides of the pipe and shall be thoroughly compacted by tamping under and on each side of the pipe to provide uniform support around the pipe, free from voids, or as specified by the Utility, whichever is more conservative.
4. Permanent pavement restoration shall be completed immediately after six (6) months from the time the temporary pavement is placed, as weather permits and not within the winter shutdown period.
5. Excavations in pavements placed less than five (5) years shall be subject to special permanent paving restoration per Newport City Codified Ordinance 12.08.050.

NEWPORT RHODE ISLAND 1639

CITY OF NEWPORT
DEPARTMENT OF PUBLIC SERVICES
DRAWN BY FJM

CITY SPECIFICATIONS

UTILITY TRENCH RESTORATION DETAIL

REVISION DATE:	SCALE	FIGURE
MAY 2014	1"=2'	7.01

NO.	DATE	REVISION	BY	APVD

DSGN C.O'NEILL | DR E.SHERIFI | CHK M.SCHMITZ | APVD

Jacobs
120 ST JAMES AVENUE
5TH FLOOR
BOSTON, MA 02116

CSO PROGRAM MANAGER
BELLEVUE AVENUE AND LEDGE ROAD CATCH BASIN DISCONNECTION
CITY OF NEWPORT, RHODE ISLAND
DEPARTMENT OF UTILITIES

CIVIL
STANDARD DETAILS

REUSE OF DOCUMENTS: THIS DOCUMENT, AND THE IDEAS AND DESIGNS INCORPORATED HEREIN, AS AN INSTRUMENT OF PROFESSIONAL SERVICE, IS THE PROPERTY OF JACOBS AND IS NOT TO BE USED, IN WHOLE OR IN PART, FOR ANY OTHER PROJECT WITHOUT THE WRITTEN AUTHORIZATION OF JACOBS.
© JACOBS 2024. ALL RIGHTS RESERVED.

NTS
VERIFY SCALE
BAR IS ONE INCH ON ORIGINAL DRAWING.
0 1"

DATE	JULY 2026
PROJ	D3258803
DWG	C-506
SHEET	015 of 20

CULTEC RECHARGER® 280HD SPECIFICATIONS

GENERAL

CULTEC RECHARGER 280HD CHAMBERS ARE DESIGNED FOR UNDERGROUND STORMWATER MANAGEMENT. THE CHAMBERS MAY BE USED FOR RETENTION, RECHARGING, DETENTION OR CONTROLLING THE FLOW OF ON-SITE STORMWATER RUNOFF.

CHAMBER PARAMETERS

1. THE CHAMBERS WILL BE MANUFACTURED BY CULTEC, INC. OF BROOKFIELD, CT. (203-775-4416 OR 1-800-428-5832)
2. THE CHAMBER SHALL BE VACUUM THERMOFORMED OF HIGH MOLECULAR WEIGHT HIGH DENSITY POLYETHYLENE (HMWHDPE) WITH A BLACK INTERIOR AND BLUE EXTERIOR.
3. THE CHAMBER WILL BE ARCHED IN SHAPE.
4. THE CHAMBER WILL BE OPEN-BOTTOMED.
5. THE CHAMBER SHALL BE DJOINED USING AN INTERLOCKING OVERLAPPING RIB METHOD. CONNECTIONS MUST BE FULLY SHOULDERED OVERLAPPING RIBS, HAVING NO SEPARATE COUPLINGS OR SEPARATE END WALLS.
6. THE NOMINAL CHAMBER DIMENSIONS OF THE CULTEC RECHARGER 280HD SHALL BE 26.5 INCHES (673 mm) TALL, 47 INCHES (1194 mm) WIDE AND 8 FEET (2.44 m) LONG. THE INSTALLED LENGTH OF A JOINED RECHARGER 280HD SHALL BE 7 FEET (2.13 m).
7. MAXIMUM INLET OPENING ON THE CHAMBER ENDWALL IS 18 INCHES (450 mm) HDPE.
8. THE CHAMBER WILL HAVE TWO SIDE PORTALS TO ACCEPT CULTEC HVLV® FC-24 FEED CONNECTORS TO CREATE AN INTERNAL MANIFOLD. NOMINAL INSIDE DIMENSIONS OF THE SIDE PORTAL SHALL HAVE A WIDTH OF 11.25" [286 mm] AND HEIGHT OF 11.5" [292 mm]. THE SIDE PORTAL CAN ACCEPT A MAXIMUM OUTER DIAMETER (O.D.) PIPE SIZE OF 12.25 INCHES [311 mm].
9. THE NOMINAL CHAMBER DIMENSIONS OF THE CULTEC HVLV® FC-24 FEED CONNECTOR SHALL BE 12 INCHES (305 mm) TALL, 16 INCHES (406 mm) WIDE AND 24.2 INCHES (614 mm) LONG.
10. THE NOMINAL STORAGE VOLUME OF THE RECHARGER 280HD CHAMBER WILL BE 6.079 FT3 / FT (0.565 m^3 / m) - WITHOUT STONE. THE NOMINAL STORAGE VOLUME OF A JOINED RECHARGER 280HD SHALL BE 42.553 FT^3 / UNIT (1.205 m^3 / UNIT) - WITHOUT STONE.
11. THE NOMINAL STORAGE VOLUME OF THE HVLV FC-24 FEED CONNECTOR WILL BE 0.913 FT^3 / FT (0.085 m^3 / m) - WITHOUT STONE.
12. THE RECHARGER 280HD CHAMBER WILL SEVENTY-TWO DISCHARGE HOLES BORED INTO THE SIDEWALLS OF THE UNIT'S CORE TO PROMOTE LATERAL CONVEYANCE OF WATER.
13. THE RECHARGER 280HD CHAMBER SHALL HAVE 15 CORRUGATIONS.
14. THE ENDWALL OF THE CHAMBER, WHEN PRESENT, WILL BE AN INTEGRAL PART OF THE CONTINUOUSLY FORMED UNIT. SEPARATE END PLATES CANNOT BE USED WITH THIS UNIT.
15. THE RECHARGER 280RHD STAND ALONE UNIT MUST BE FORMED AS A WHOLE CHAMBER HAVING TWO FULLY FORMED INTEGRAL ENDWALLS AND HAVING NO SEPARATE END PLATES OR SEPARATE END WALLS.
16. THE RECHARGER 280SHD STARTER UNIT MUST BE FORMED AS A WHOLE CHAMBER HAVING ONE FULLY FORMED INTEGRAL ENDWALL AND ONE PARTIALLY FORMED INTEGRAL ENDWALL WITH A LOWER TRANSFER OPENING OF 9 INCHES (229 mm) HIGH X 35 INCHES (889 mm) WIDE.
17. THE RECHARGER 280HD INTERMEDIATE UNIT MUST BE FORMED AS A WHOLE CHAMBER HAVING ONE FULLY OPEN ENDWALL AND ONE PARTIALLY FORMED INTEGRAL ENDWALL WITH A LOWER TRANSFER OPENING OF 9 INCHES (229 mm) HIGH X 35 INCHES (889 mm) WIDE.
18. THE RECHARGER 280EHD END UNIT MUST BE FORMED AS A WHOLE CHAMBER HAVING ONE FULLY FORMED INTEGRAL ENDWALL AND ONE FULLY OPEN END WALL AND HAVING NO SEPARATE END PLATES OR END WALLS.
19. THE HVLV FC-24 FEED CONNECTOR MUST BE FORMED AS A WHOLE CHAMBER HAVING TWO OPEN END WALLS AND HAVING NO SEPARATE END PLATES OR SEPARATE END WALLS. THE UNIT WILL FIT INTO THE SIDE PORTALS OF THE RECHARGER 280HD AND ACT AS CROSS FEED CONNECTIONS.
20. CHAMBERS MUST HAVE HORIZONTAL STIFFENING FLEX REDUCTION STEPS BETWEEN THE RIBS.
21. THE CHAMBER WILL HAVE A RAISED INTEGRAL CAP AT THE TOP OF THE ARCH IN THE CENTER OF EACH UNIT TO BE USED AS AN OPTIONAL INSPECTION PORT OR CLEAN-OUT.
22. THE UNITS MAY BE TRIMMED TO CUSTOM LENGTHS BY CUTTING BACK TO ANY CORRUGATION.
23. THE CHAMBER SHALL BE MANUFACTURED IN AN IN AN ISO 9001:2015 CERTIFIED FACILITY
24. THE CHAMBER WILL BE DESIGNED TO WITHSTAND TRAFFIC LOADS WHEN INSTALLED ACCORDING TO CULTEC'S INSTALLATION INSTRUCTIONS.
25. THE CHAMBER SHALL BE DESIGNED AND MANUFACTURED TO MEET THE MATERIAL AND STRUCTURAL REQUIREMENTS OF IAPMO PS 63-2019, INCLUDING RESISTANCE TO AASHTO H-10 AND H-20 HIGHWAY LIVE LOADS, WHEN INSTALLED IN ACCORDANCE WITH CULTEC'S INSTALLATION INSTRUCTIONS.
26. MAXIMUM ALLOWED COVER OVER TOP OF UNIT SHALL BE 12 FEET (3.65 m).

CULTEC HVLV® FC-24 FEED CONNECTOR PRODUCT SPECIFICATIONS

GENERAL

CULTEC HVLV FC-24 FEED CONNECTORS ARE DESIGNED TO CREATE AN INTERNAL MANIFOLD FOR CULTEC RECHARGER 280HD STORMWATER CHAMBERS.

CHAMBER PARAMETERS

1. THE CHAMBERS WILL BE MANUFACTURED BY CULTEC, INC. OF BROOKFIELD, CT. (203-775-4416 OR 1-800-428-5832)
2. THE CHAMBER SHALL BE VACUUM THERMOFORMED OF HIGH MOLECULAR WEIGHT HIGH DENSITY POLYETHYLENE (HMWHDPE) WITH A BLACK INTERIOR AND BLUE EXTERIOR.
3. THE CHAMBER WILL BE ARCHED IN SHAPE.
4. THE CHAMBER WILL BE OPEN-BOTTOMED.
5. THE NOMINAL CHAMBER DIMENSIONS OF THE CULTEC HVLV FC-24 FEED CONNECTOR SHALL BE 12 INCHES (305 mm) TALL, 16 INCHES (406 mm) WIDE AND 24.2 INCHES (614 mm) LONG.
6. THE NOMINAL STORAGE VOLUME OF THE HVLV FC-24 FEED CONNECTOR WILL BE 0.913 FT^3 / FT (0.085 m^3 / m) - WITHOUT STONE.
7. THE HVLV FC-24 FEED CONNECTOR CHAMBER SHALL HAVE 2 CORRUGATIONS.
8. THE HVLV FC-24 FEED CONNECTOR MUST BE FORMED AS A WHOLE CHAMBER HAVING TWO OPEN END WALLS AND HAVING NO SEPARATE END PLATES OR SEPARATE END WALLS. THE UNIT WILL FIT INTO THE SIDE PORTALS OF THE CULTEC RECHARGER STORMWATER CHAMBER AND ACT AS CROSS FEED CONNECTIONS CREATING AN INTERNAL MANIFOLD.
9. THE CHAMBER WILL BE DESIGNED TO WITHSTAND TRAFFIC LOADS WHEN INSTALLED ACCORDING TO CULTEC'S RECOMMENDED INSTALLATION INSTRUCTIONS.
10. THE CHAMBER SHALL BE MANUFACTURED IN AN ISO 9001:2015 CERTIFIED FACILITY.

CULTEC NO. 410™ NON-WOVEN GEOTEXTILE

CULTEC NO. 410™ NON-WOVEN GEOTEXTILE MAY BE USED WITH CULTEC CONTACTOR® AND RECHARGER® STORMWATER INSTALLATIONS TO PROVIDE A BARRIER THAT PREVENTS SOIL INTRUSION INTO THE STONE.

GEOTEXTILE PARAMETERS

1. THE GEOTEXTILE SHALL BE PROVIDED BY CULTEC, INC. OF BROOKFIELD, CT. (203-775-4416 OR 1-800-428-5832)
2. THE GEOTEXTILE SHALL BE BLACK IN APPEARANCE.
3. THE GEOTEXTILE SHALL HAVE A TYPICAL WEIGHT OF 4.5 OZ/SY (142 G/M).
4. THE GEOTEXTILE SHALL HAVE A TENSILE STRENGTH VALUE OF 120 LBS (533 N) PER ASTM D4632 TESTING METHOD.
5. THE GEOTEXTILE SHALL HAVE AN ELONGATION @ BREAK VALUE OF 50% PER ASTM D4632 TESTING METHOD.
6. THE GEOTEXTILE SHALL HAVE A MULLEN BURST VALUE OF 225 PSI (1551 KPA) PER ASTM D3786 TESTING METHOD.
7. THE GEOTEXTILE SHALL HAVE A PUNCTURE STRENGTH VALUE OF 65 LBS (289 N) PER ASTM D4833 TESTING METHOD.
8. THE GEOTEXTILE SHALL HAVE A CBR PUNCTURE VALUE OF 340 LBS (1513 N) PER ASTM D6241 TESTING METHOD.
9. THE GEOTEXTILE SHALL HAVE A TRAPEZOID TEAR VALUE OF 50 LBS (222 N) PER ASTM D4533 TESTING METHOD.
10. THE GEOTEXTILE SHALL HAVE A AOS VALUE OF 70 U.S. SIEVE (0.212 MM) PER ASTM D4751 TESTING METHOD.
11. THE GEOTEXTILE SHALL HAVE A PERMITTIVITY VALUE OF 1.7 SEC-1 PER ASTM D4491 TESTING METHOD.
12. THE GEOTEXTILE SHALL HAVE A WATER FLOW RATE VALUE OF 135 GAL/MIN/SF (5500 L/MIN/SM) PER ASTM D4491 TESTING METHOD.
13. THE GEOTEXTILE SHALL HAVE A UV STABILITY @ 500 HOURS VALUE OF 70% PER ASTM D4355 TESTING METHOD.

CULTEC AFAB-HPF™ WOVEN GEOTEXTILE

CULTEC AFAB-HPF WOVEN GEOTEXTILE IS DESIGNED AS A UNDERLAYMENT TO PREVENT SCOURING CAUSED BY WATER MOVEMENT WITHIN THE CULTEC CHAMBERS AND FEED CONNECTORS UTILIZING THE CULTEC MANIFOLD FEATURE. IT MAY ALSO BE USED AS A COMPONENT OF THE CULTEC SEPARATOR ROW TO ACT AS A BARRIER TO PREVENT SOIL/CONTAMINANT INTRUSION INTO THE STONE WHILE ALLOWING FOR MAINTENANCE.

GEOTEXTILE PARAMETERS

1. THE GEOTEXTILE SHALL BE PROVIDED BY CULTEC OF BROOKFIELD, CT. (203-775-4416 OR 1-800-428-5832)
2. THE GEOTEXTILE SHALL BE BLACK IN APPEARANCE.
3. THE GEOTEXTILE SHALL HAVE A TENSILE STRENGTH OF 320 X 320 LBS (1,420 X 1,420 N) PER ASTM D4632 TESTING METHOD.
4. THE GEOTEXTILE SHALL HAVE A ELONGATION @ BREAK RESISTANCE OF 15 X 15% PER ASTM D4632 TESTING METHOD.
5. THE GEOTEXTILE SHALL HAVE A WIDE WIDTH TENSILE RESISTANCE OF 3,563 X 3,563 LBS/FT (52 X 52 KN/M) PER ASTM D4595 TESTING METHOD.
6. THE GEOTEXTILE SHALL HAVE A CBR PUNCTURE RESISTANCE OF 1,500 LBS (6,670 N) PER ASTM D6241 TESTING METHOD.
7. THE GEOTEXTILE SHALL HAVE A TRAPEZOIDAL TEAR RESISTANCE OF 120 X 120 LBS (540 X 540 N) PER ASTM D4533 TESTING METHOD.
8. THE GEOTEXTILE SHALL HAVE AN APPARENT OPENING SIZE OF 30 US STD. SIEVE (0.60 MM) PER ASTM D4751 TESTING METHOD.
9. THE GEOTEXTILE SHALL HAVE A PERMITTIVITY RATING OF 0.2 SEC-1 PER ASTM D4491 TESTING METHOD.
10. THE GEOTEXTILE SHALL HAVE A WATER FLOW RATING OF 22 GPM/FT2 (900 LPM/M2) PER ASTM D4491 TESTING METHOD.
11. THE GEOTEXTILE SHALL HAVE A UV RESISTANCE OF 70% @ 500 HRS. PER ASTM D4355 TESTING METHOD.

GENERAL NOTES

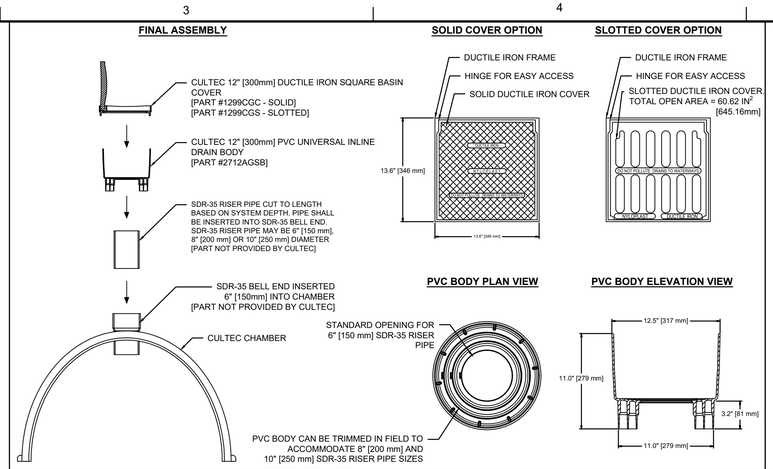

CULTEC UNIVERSAL INSPECTION PORT KIT DETAIL

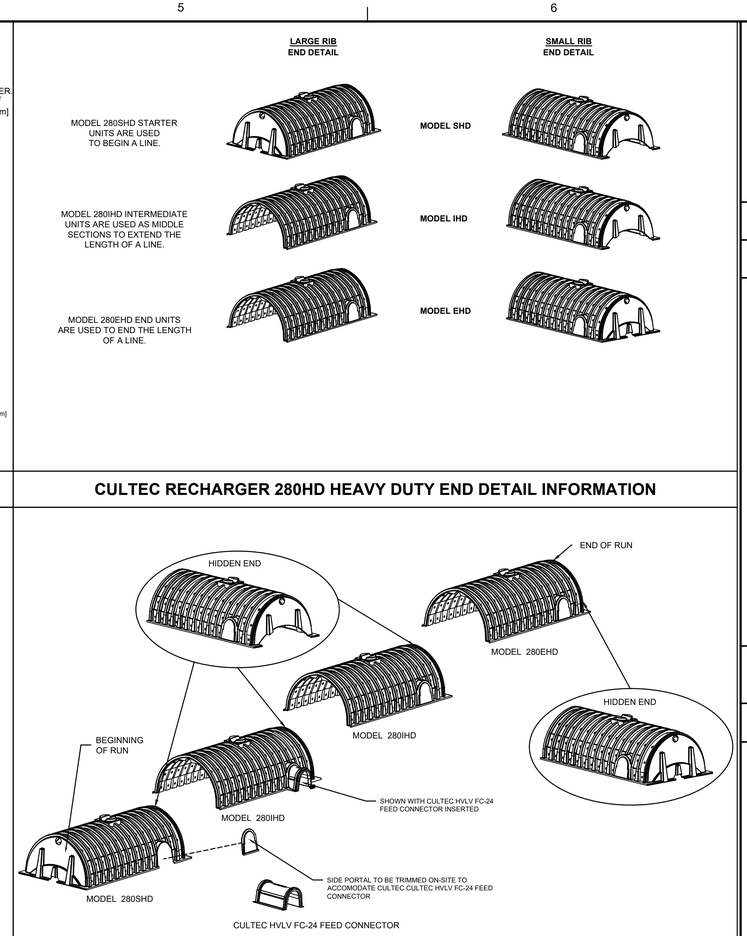

CULTEC RECHARGER 280HD HEAVY DUTY END DETAIL INFORMATION

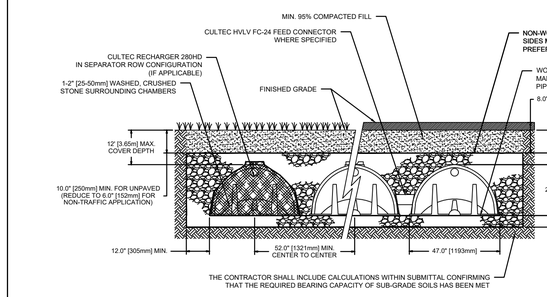

CULTEC RECHARGER 280HD CROSS SECTION

CULTEC RECHARGER 280HD HEAVY DUTY TYPICAL INTERLOCK

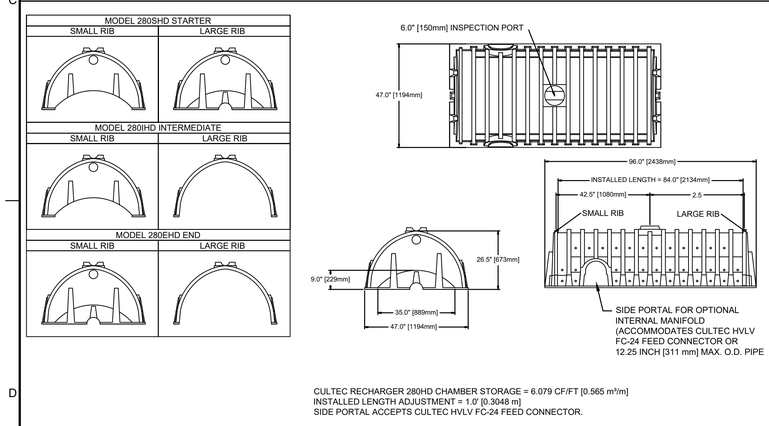

CULTEC RECHARGER 280HD CHAMBER STORAGE = 6.079 CF/FT [0.565 m^3/m]
INSTALLED LENGTH ADJUSTMENT = 1.0' [0.3048 m]
SIDE PORTAL ACCEPTS CULTEC HVLV FC-24 FEED CONNECTOR.

CULTEC RECHARGER 280HD HEAVY DUTY THREE VIEW

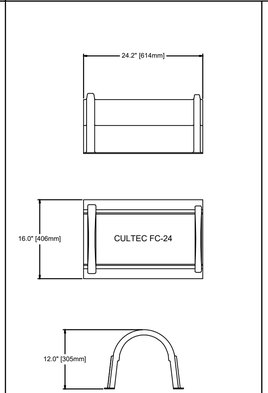

CULTEC HVLV FC-24 FEED CONNECTOR THREE VIEW

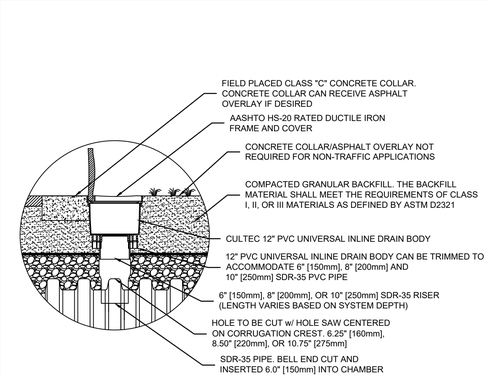

CULTEC INSPECTION PORT - ZOOM DETAIL

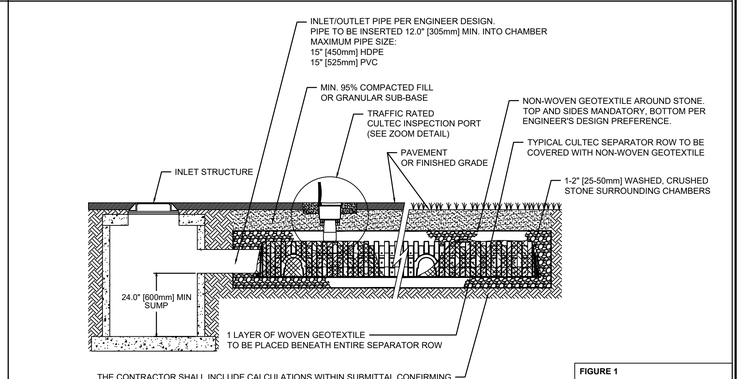

CULTEC SEPARATOR ROW - CULTEC INSPECTION PORT DETAIL (IF APPLICABLE)

DETAILS PROVIDED ON THIS SHEET ARE AN EXAMPLE PROVIDED FOR ILLUSTRATIVE PURPOSES.
PRODUCT SPECIFIC INSTALLATION DETAILS SHALL BE PROVIDED BY THE CONTRACTOR AS SHOP DRAWING.
SEE SPECIFICATIONS FOR MORE INFORMATION. APPROVED PRODUCT SHALL BE CULTEC OR EQUAL.

NO.	DATE	REVISION	BY	APVD

DSGN C.ONEILL | DR E.SHERIFI | CHK M.SCHMITZ | APVD

120 ST JAMES AVENUE
5TH FLOOR
BOSTON, MA 02116

CSO PROGRAM MANAGER
BELLEVUE AVENUE AND LEDGE ROAD
CATCH BASIN DISCONNECTION
CITY OF NEWPORT, RHODE ISLAND
DEPARTMENT OF UTILITIES

Jacobs

CIVIL
MANUFACTURE'S DETAILS

NTS
VERIFY SCALE
BAR IS ONE INCH ON ORIGINAL DRAWING.
0 1"

DATE	JULY 2026
PROJ	D3258803
DWG	C-507
SHEET	016 of 20

REUSE OF DOCUMENTS: THIS DOCUMENT, AND THE IDEAS AND DESIGNS INCORPORATED HEREIN, AS AN INSTRUMENT OF PROFESSIONAL SERVICE, IS THE PROPERTY OF JACOBS AND IS NOT TO BE USED, IN WHOLE OR IN PART, FOR ANY OTHER PROJECT WITHOUT THE WRITTEN AUTHORIZATION OF JACOBS.
© JACOBS 2024. ALL RIGHTS RESERVED.

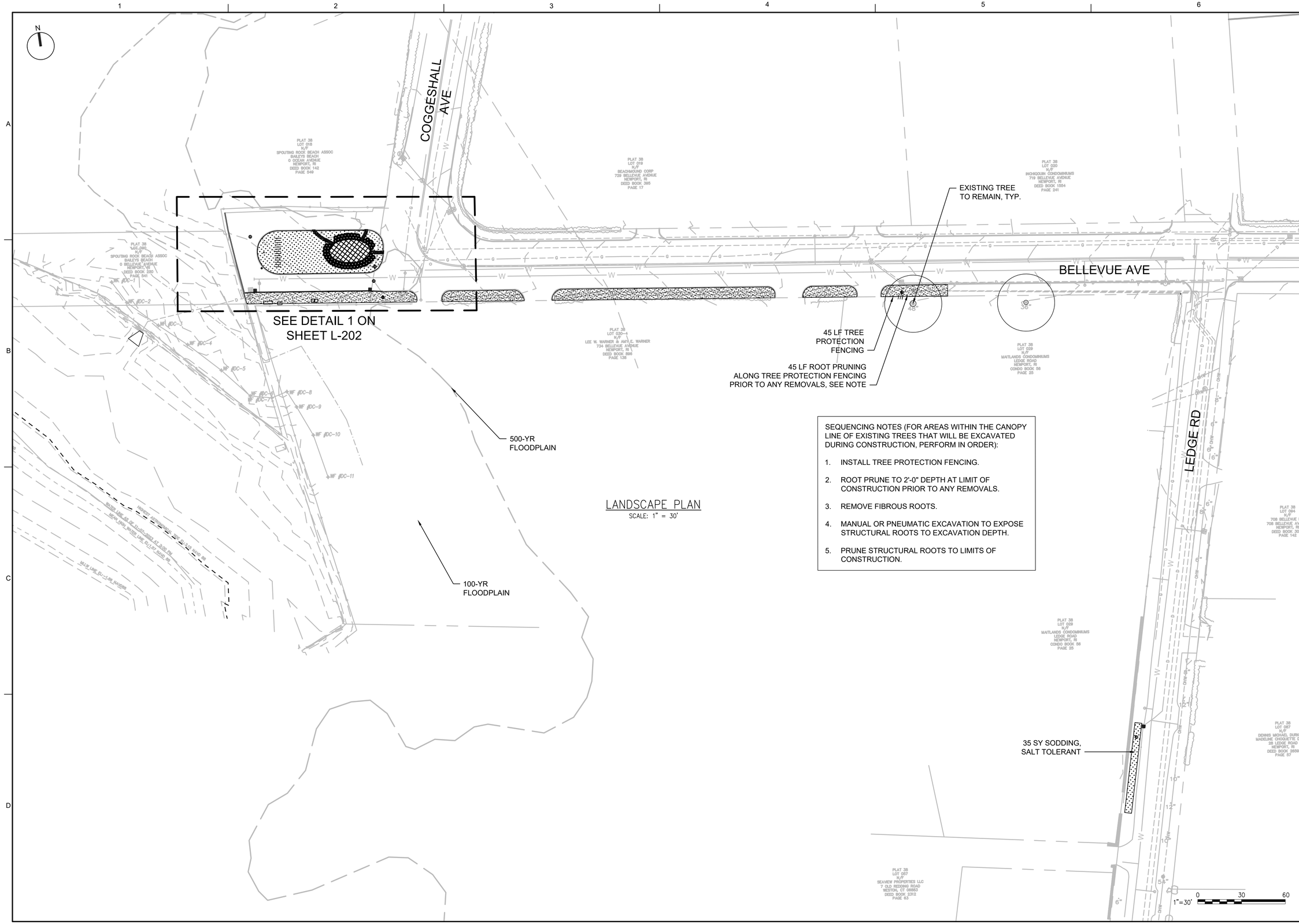

LANDSCAPE PLAN
SCALE: 1" = 30'

SEQUENCING NOTES (FOR AREAS WITHIN THE CANOPY LINE OF EXISTING TREES THAT WILL BE EXCAVATED DURING CONSTRUCTION, PERFORM IN ORDER):

1. INSTALL TREE PROTECTION FENCING.
2. ROOT PRUNE TO 2'-0" DEPTH AT LIMIT OF CONSTRUCTION PRIOR TO ANY REMOVALS.
3. REMOVE FIBROUS ROOTS.
4. MANUAL OR PNEUMATIC EXCAVATION TO EXPOSE STRUCTURAL ROOTS TO EXCAVATION DEPTH.
5. PRUNE STRUCTURAL ROOTS TO LIMITS OF CONSTRUCTION.

NO.	DATE	REVISION	BY	APVD

DSGN R.SCHERNER DR R.SCHERNER CHK M.SCHMITZ APVD

Jacobs
120 ST JAMES AVENUE
5TH FLOOR
BOSTON, MA 02116

CSO PROGRAM MANAGER
BELLEVUE AVENUE AND LEDGE ROAD
CATCH BASIN DISCONNECTION
CITY OF NEWPORT, RHODE ISLAND
DEPARTMENT OF UTILITIES

LANDSCAPE
LANDSCAPE PLAN

AS NOTED
VERIFY SCALE
BAR IS ONE INCH ON ORIGINAL DRAWING.
0 1"

DATE	JULY 2026
PROJ	D3258803
DWG	L-201
SHEET	017 of 20

© JACOBS 2024. ALL RIGHTS RESERVED.
REUSE OF DOCUMENTS: THIS DOCUMENT, AND THE IDEAS AND DESIGNS INCORPORATED HEREIN, AS AN INSTRUMENT OF PROFESSIONAL SERVICE, IS THE PROPERTY OF JACOBS AND IS NOT TO BE USED, IN WHOLE OR IN PART, FOR ANY OTHER PROJECT WITHOUT THE WRITTEN AUTHORIZATION OF JACOBS.

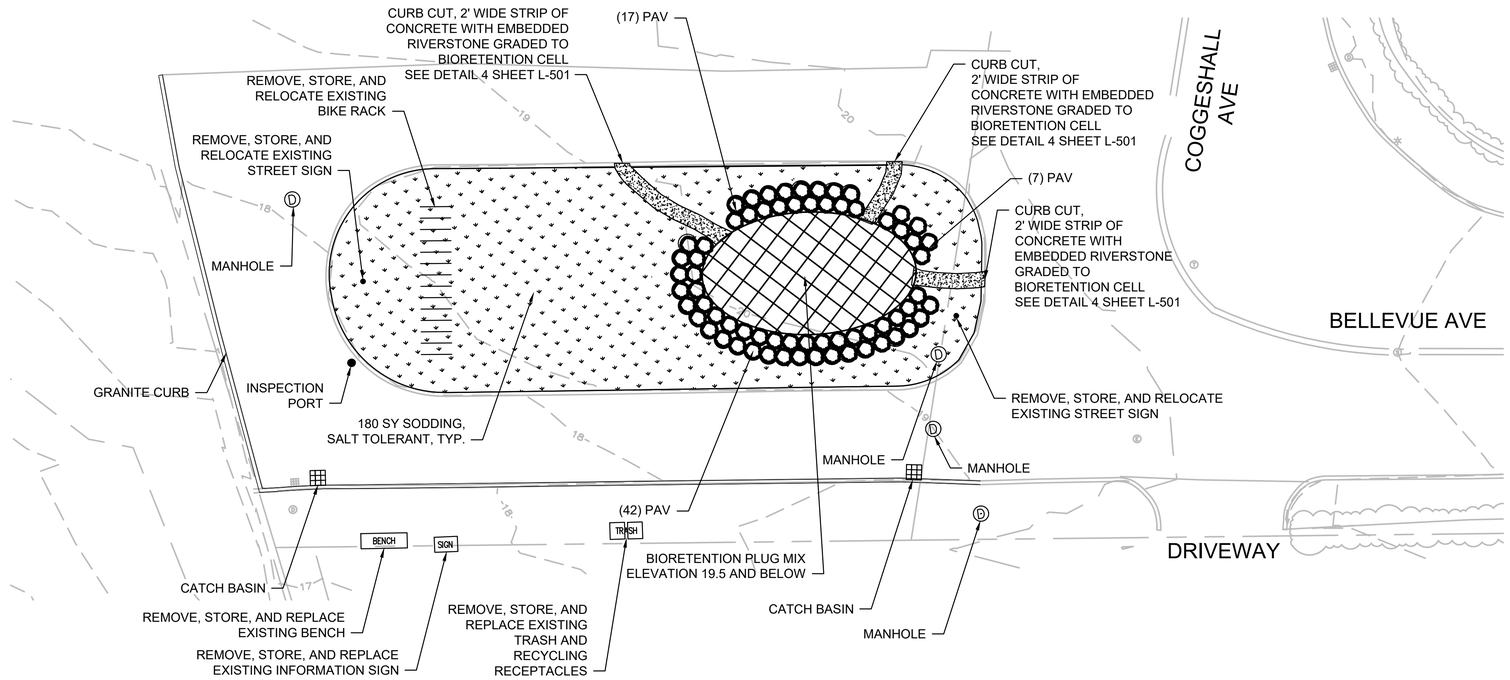

1 LANDSCAPE DETAIL PLAN – BELLEVUE AVE

SCALE: 1" = 10'

LANDSCAPE SCHEDULE

Bellevue Ave & Ledge Rd Catch Basin Disconnection
Newport, RI

KEY	BOTANICAL NAME	COMMON NAME	QUA.	SIZE	TYPE	SPACING	PLANTING SEASON	NOTES
	CONTAINER STOCK							
PAV	*Panicum virgatum*	SWITCH GRASS	66	1 #	CONTAINER	2' O.C.	SPRING OR FALL	
		TOTAL:	**66**					
	BIORETENTION PLUG MIX (Sedges, Rushes, and Herbaceous Wildflowers)							
	Carex crinita	FRINGED SEDGE	32	2" PLUG	FLAT - LP32	12" O.C.	SPRING (MAY 1 - JUN 15) OR FALL (SEP 1 - OCT 15)	APPROX. 70% OF AREA TO BE GRASSES, SEDGES & RUSHES, PLANTING SWATHS OF EACH SPECIES SHALL CONSIST OF 8 PLUGS
	Carex lurida	SHALLOW SEDGE	32					
	Carex lupulina	HOP SEDGE	32					
	Carex scoparia	POINTED BROOM SEDGE	32					
	Carex vulpinoidea	FOX SEDGE	32					
	Glyceria grandis	AMERICAN MANNAGRASS	32					
	Juncus effusus	SOFT RUSH	32					
	Poa palustris	FOWL BLUEGRASS	32					
	Scirpus atrovirens	GREEN BULRUSH	32					
	Asclepias incarnata	SWAMP MILKWEED	16					
	Aster lateriflorus	STARVED ASTER	16					
	Bidens frondosa	BEGGAR TICKS	16					
	Eupatorium maculatum	SPOTTED JOE PYE WEED	16					
	Iris versicolor	BLUE FLAG	16					
	Mimulus ringens	SQUARE STEMMED MONKEY FLOWER	16					
	Vernonia noveboracensis	NEW YORK IRONWEED	16					
		TOTAL:	**400**					
	SODDING							
	SODDING, SALT TOLERANT		215	SY			SPRING OR FALL	SALT TOLERANT

LANDSCAPING NOTES:

1. UNLESS SHOWN ON THE LANDSCAPING PLANS, ALL DISTURBED AREAS NOT RECEIVING A HARD SURFACE SHALL BE COVERED WITH GRASS.
2. THE PLANTING OPERATION SHALL ONLY BE PERFORMED BY AN EXPERIENCED LANDSCAPE CONTRACTOR FAMILIAR WITH PLANTING PROCEDURES AND UNDER THE DIRECTION OF A QUALIFIED SUPERVISOR.
3. ALL PLANT MATERIALS SHALL COMPLY WITH AMERICAN STANDARDS FOR NURSERY STOCK ANSI 760.1.
4. IN ACCORDANCE WITH ANSI 760.1, EACH PLANT SIZE LISTED ON THE PLANT LIST IS THE MINIMUM SIZE ALLOWABLE FOR THAT GRADE AND SHALL INCLUDE PLANTS FROM THAT SIZE UP TO BUT NOT INCLUDING THE NEXT LARGER GRADE SIZE.
5. THE CONTRACTOR SHALL LAY OUT ALL PLANT BEDS AND PLACE THE INDIVIDUAL PLANTS ON FINISHED GRADE IN THE LOCATIONS INDICATED ON PLAN FOR REVIEW BY THE ENGINEER PRIOR TO INSTALLATION. PROVIDE 72 HOURS ADVANCED NOTIFICATION TO THE ENGINEER.
6. UPON NOTIFICATION, THE LANDSCAPE ARCHITECT OR ENGINEER WILL REVIEW IN THE FIELD THE LAYOUT OF ALL INDIVIDUAL PLANT LOCATIONS BEFORE INSTALLATION IS PERMITTED. THE ENGINEER RESERVES THE RIGHT TO INTERCHANGE THE PLANTS AND TO ADJUST THE PLANT LOCATIONS.
7. INSTALL PLANT MATERIALS AT THE CORRECT GRADE. CONFIRM THAT THE FINISHED GRADING IS COMPLETED IN THE AREAS WHERE PLANT MATERIALS ARE TO BE INSTALLED.
8. THE CONTRACTOR SHALL BE RESPONSIBLE FOR PROTECTING AND MAINTAINING THE INSTALLED PLANT MATERIALS UNTIL ONE YEAR AFTER SUBSTANTIAL COMPLETION OF THE CONSTRUCTION. FOR MAINTENANCE PERIOD, SEE SPECS.
9. TREE PROTECTION SHALL REMAIN IN PLACE UNTIL SUBSTANTIAL COMPLETION.
10. UNLESS OTHERWISE SPECIFIED, WHEN WORKING WITHIN DRIPLINE OF AN EXISTING TREE, EXCAVATION SHALL BE DONE BY PNEUMATIC OR HAND EXCAVATION ONLY AND BE UNDER THE SUPERVISION OF A CERTIFIED ARBORIST. NO MECHANICAL EQUIPMENT IS ALLOWED WITHIN THE TREE DRIPLINE, UNTIL PNEUMATIC OR HAND EXCAVATION AND ROOT PRUNING IS COMPLETE.

1"=10' 0 10 20

NO.	DATE	REVISION	BY	APVD

DSGN R.SCHERNER | DR R.SCHERNER | CHK M.SCHMITZ | APVD

120 ST JAMES AVENUE
5TH FLOOR
BOSTON, MA 02116

CSO PROGRAM MANAGER
BELLEVUE AVENUE AND LEDGE ROAD
CATCH BASIN DISCONNECTION
CITY OF NEWPORT, RHODE ISLAND
DEPARTMENT OF UTILITIES

LANDSCAPE
LANDSCAPE DETAIL PLAN

AS NOTED
VERIFY SCALE
BAR IS ONE INCH ON ORIGINAL DRAWING.
0 1"

DATE	JULY 2026
PROJ	D3258803
DWG	L-202
SHEET	018 of 20

REUSE OF DOCUMENTS: THIS DOCUMENT, AND THE IDEAS AND DESIGNS INCORPORATED HEREIN, AS AN INSTRUMENT OF PROFESSIONAL SERVICE, IS THE PROPERTY OF JACOBS AND IS NOT TO BE USED, IN WHOLE OR IN PART, FOR ANY OTHER PROJECT WITHOUT THE WRITTEN AUTHORIZATION OF JACOBS.
© JACOBS 2024. ALL RIGHTS RESERVED.

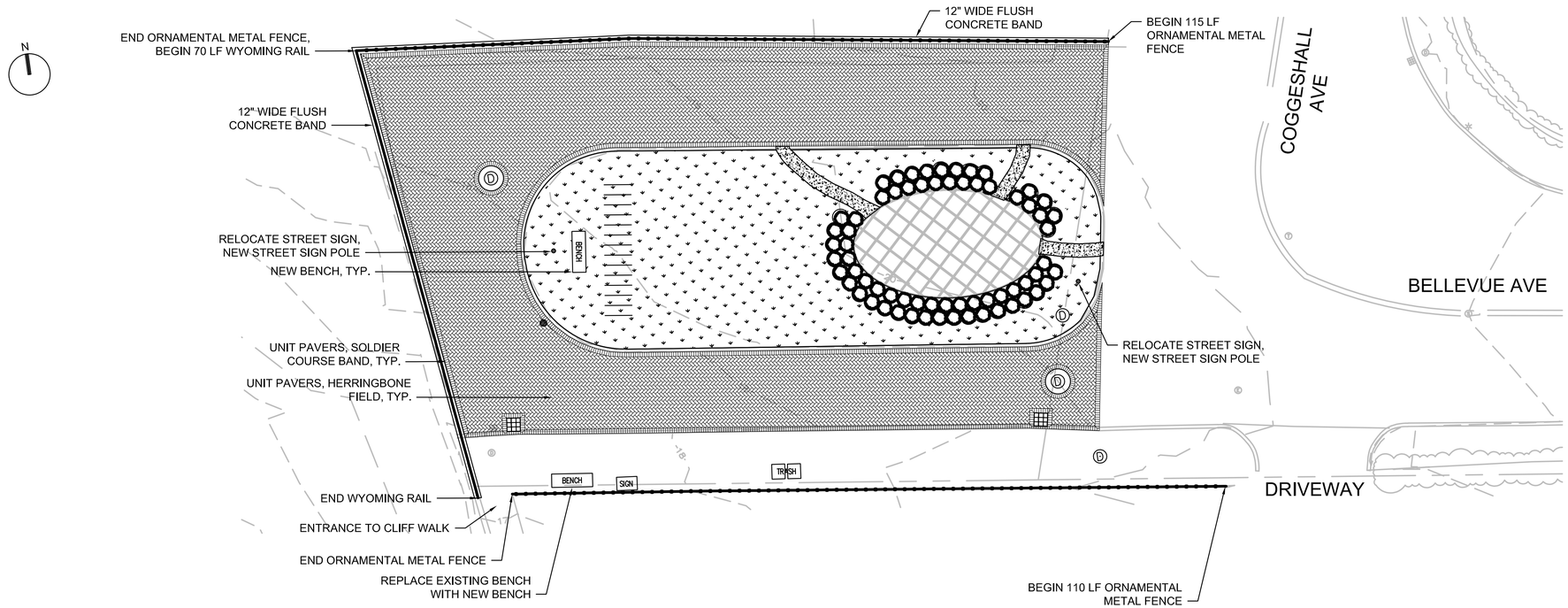

1 ADD ALTERNATE 1 – BELLEVUE AVE

SCALE: 1" = 10'

1"=10' 0 10 20

NO.	DATE	REVISION	BY	APVD

DSGN R.SCHERNER | DR R.SCHERNER | CHK M.SCHMITZ | APVD B. COTTER

120 ST JAMES AVENUE
5TH FLOOR
BOSTON, MA 02116

CSO PROGRAM MANAGER
BELLEVUE AVENUE AND LEDGE ROAD
CATCH BASIN DISCONNECTION
CITY OF NEWPORT, RHODE ISLAND
DEPARTMENT OF UTILITIES

LANDSCAPE

ADD ALTERNATE 1

AS NOTED

VERIFY SCALE

BAR IS ONE INCH ON ORIGINAL DRAWING.
0 1"

DATE	JULY 2026
PROJ	D3258803
DWG	L-203
SHEET	019 of 20

REUSE OF DOCUMENTS: THIS DOCUMENT, AND THE IDEAS AND DESIGNS INCORPORATED HEREIN, AS AN INSTRUMENT OF PROFESSIONAL SERVICE, IS THE PROPERTY OF JACOBS AND IS NOT TO BE USED, IN WHOLE OR IN PART, FOR ANY OTHER PROJECT WITHOUT THE WRITTEN AUTHORIZATION OF JACOBS.

© JACOBS 2024. ALL RIGHTS RESERVED.

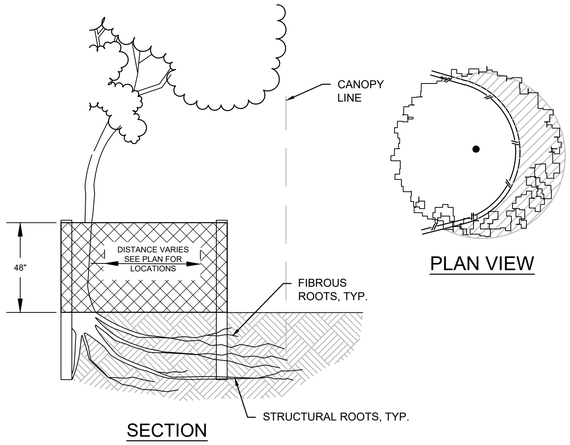

NOTES:
1. NO CONSTRUCTION TRAFFIC WITHIN FENCE.
2. NO CUTTING, FILLING, TRENCHING, GRUBBING OR ROOT COMPACTION WITHIN FENCE.
3. ORANGE SAFETY FENCE SHALL BE INSTALLED PRIOR TO ANY GRADING, CONSTRUCTION OR OTHER LAND-DISTURBING ACTIVITY. ORANGE SAFETY FENCE SHALL BE FASTENED SECURELY TO THE T-POSTS WITH WIRES OR ZIP TIES.
4. ACCESS ROUTES TO BE VERIFIED BY THE ENGINEER AT PRECONSTRUCTION MEETING. REVISIONS TO THE ALIGNMENT THAT MINIMIZE TREE DISTURBANCE ARE ENCOURAGED AND REQUIRE REVIEW AND APPROVAL BY THE ENGINEER.
5. FENCING MUST REMAIN IN PLACE DURING ALL PHASES OF CONSTRUCTION. REMOVE ALL TREE PROTECTION FENCING UPON COMPLETION OF THE PROJECT.

1 TREE PROTECTION FOR WORK WITHIN DRIPLINE

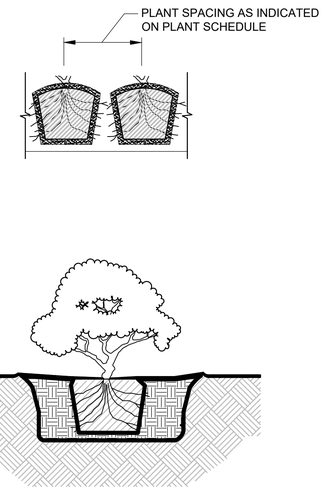

NOTES:
1. SEPARATE AND SPREAD OUT CONTAINER BOUND ROOTS, IF APPLICABLE.
2. CUT CIRCLING ROOTS, IF APPLICABLE.

2 CONTAINER PLANTING DETAIL

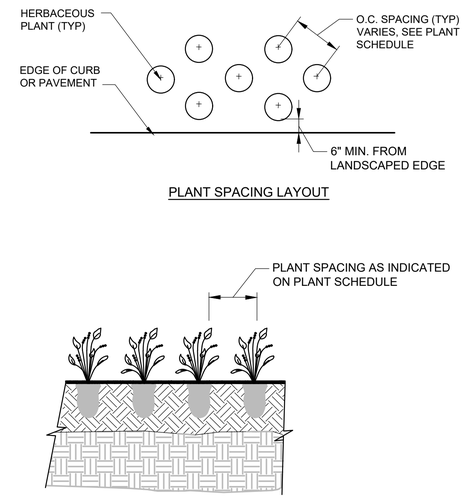

3 PLUG PLANTING DETAIL

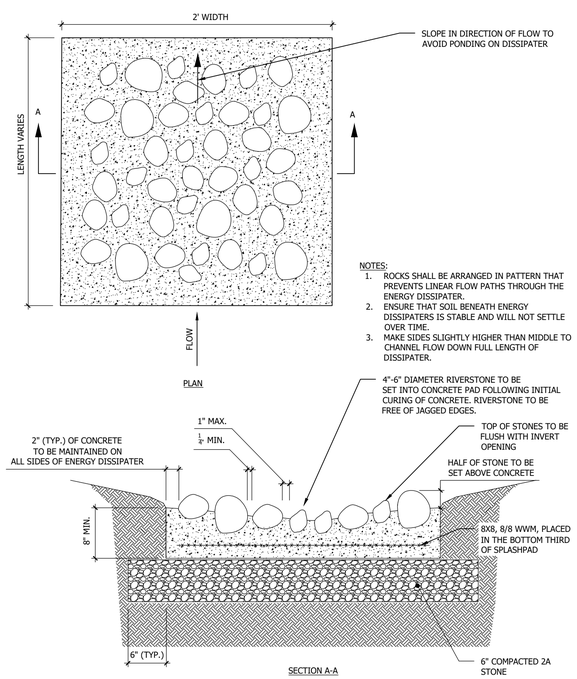

NOTES:
1. ROCKS SHALL BE ARRANGED IN PATTERN THAT PREVENTS LINEAR FLOW PATHS THROUGH THE ENERGY DISSIPATER.
2. ENSURE THAT SOIL BENEATH ENERGY DISSIPATERS IS STABLE AND WILL NOT SETTLE OVER TIME.
3. MAKE SIDES SLIGHTLY HIGHER THAN MIDDLE TO CHANNEL FLOW DOWN FULL LENGTH OF DISSIPATER.

4 CONCRETE INLETS WITH EMBEDDED RIVERSTONE

NTS

NO.	DATE	REVISION	BY	APVD

DSGN R.SCHERNER | DR R.SCHERNER | CHK M.SCHMITZ | APVD

120 ST JAMES AVENUE
5TH FLOOR
BOSTON, MA 02116

CSO PROGRAM MANAGER
BELLEVUE AVENUE AND LEDGE ROAD
CATCH BASIN DISCONNECTION
CITY OF NEWPORT, RHODE ISLAND
DEPARTMENT OF UTILITIES

Jacobs

LANDSCAPE

LANDSCAPE DETAILS

AS NOTED
VERIFY SCALE
BAR IS ONE INCH ON ORIGINAL DRAWING.
0 1"

DATE	JULY 2026
PROJ	D3258803
DWG	L-501
SHEET	020 of 20

REUSE OF DOCUMENTS: THIS DOCUMENT, AND THE IDEAS AND DESIGNS INCORPORATED HEREIN, AS AN INSTRUMENT OF PROFESSIONAL SERVICE, IS THE PROPERTY OF JACOBS AND IS NOT TO BE USED, IN WHOLE OR IN PART, FOR ANY OTHER PROJECT WITHOUT THE WRITTEN AUTHORIZATION OF JACOBS.
© JACOBS 2024. ALL RIGHTS RESERVED.